Trees On The Farm

R. H. ANDERSON

BULLETIN 2
NEW SOUTH WALES DEPARTMENT OF AGRICULTURE

Price: [redacted]

Trees On The Farm

Fifth Edition, 1972

R. H. ANDERSON

BULLETIN 2
NEW SOUTH WALES DEPARTMENT OF AGRICULTURE

87649-A

CONTENTS

		Page
Chapter I	The Uses of Trees on Farm and Pastoral Areas	5
Chapter II	Principles of Tree Planting	18
Chapter III	Windbreaks and Shelter Belts	30
Chapter IV	The Farm Tree Lot	40
Chapter V	Nursery Work	53
Chapter VI	Improvement and Regeneration of Naturally Occurring Trees	60
Chapter VII	Species Recommended for Various Districts	69

CHAPTER I

The Uses of Trees on Farm and Pastoral Areas

THE existence and preservation of forest cover and tree-life in general is intimately associated with the prosperity, fertility, and comfort of any country. A land bare of trees is bleak, barren, and uninviting. Apart from supplying us with our timber and fuel requirements, forests play a very important part in other directions.

In the first place, they provide the best means of combating erosion due to either rain, stream, or wind action. The removal of forest cover on elevated land, particularly on the watersheds of stream systems, results in increased erosion and floods.

Under forest conditions on elevated lands the rainfall is absorbed gradually into the subsoil, finally making its way out at a lower level to feed gently running streams and springs. On the destruction of timber the surface soil becomes hardened and is unable to absorb the rainfall, which rushes off on the surface, resulting in ever-increasing erosion. On forest soil the rainfall flows *under* the ground, but on treeless soil the water is carried off mainly on the surface.

On areas denuded of forest cover the rain runs off rapidly and unchecked, bearing considerable quantities of silt and debris. This is carried down to the lower reaches of the river, resulting in a silting up of the bed of the stream and a covering of the fertile flats with loose debris. Owing to the increased runoff and the shallowing of the river bed, floods become more common. Irrigation, especially from natural rivers, is interfered with, as the removal of forest cover has resulted in floods in winter, when water is not needed, and intermittent stream flow in summer, when a steady supply of water is required. Artificial reservoirs are silted up, and the lessening of stream flow during summer months results in interference with navigation and loss of water power.

The erosive action of wind is also hindered by forest cover. If excessive clearing is carried out in areas where light soil predominates, wind action results in erosion of the soil and the formation of drifting sands. Some of the mallee country cleared for wheatgrowing shows indications of soil drift. In drier parts the removal of what little forest cover exists gives rise to the "scalded plains" and wind-swept areas, the process being further hastened by overstocking and the depredations of rabbits.

Forest cover has also a direct effect on climate, tending to make it more equable. It reduces to some extent the temperature of air and

soil, and contrary to general opinion, forests usually have little effect upon the total annual rainfall over an extensive area. More important, they conserve the rain that falls, the loss by evaporation and run-off being considerably reduced. An average rainfall in forested districts is, therefore, generally of greater advantage than a heavy rainfall on treeless areas.

Summing up, forest cover benefits the farmer and pastoralist by meeting his timber and fuel requirements, by preventing erosion of his soil, by regulating stream flow and making irrigation possible, by preventing the silting up of dams and reservoirs, by conserving rainfall, and by making the climate a healthier and more comfortable one.

Purposes Served by Trees

In farm or pastoral areas, trees can be usefully employed in the following capacities:

(1) As windbreaks and shelter belts.

(2) As isolated or scattered shade and shelter trees.

(3) As a reserve supply of fodder for periods of drought.

(4) As sources of the timber and fuel requirements of the farm, in addition to providing a source of revenue by the sale of products.

(5) As screens around dams and tanks to prevent silting up by dust, and undue evaporation of the water contents.

(6) As a means of preventing erosion on slopes and along the banks of creeks and rivers.

(7) As ornamental trees in improving the apperance of the homestead.

(8) As bee trees.

These purposes can be served by plantations or by natural stands where these occur and can be retained. These preserve some of the distinctive character of the Australian landscape.

Windbreaks and Shelter Belts

Windbreaks and shelter belts play an important part in the economy of farm management, and practically every district in New South Wales has a greater or lesser need of them. Comparatively little, however, has been done in the past to provide efficient windbreaks. Reliance was placed mainly on the existence of natural belts of timber and the shelter provided by adjacent forests. As the country became more open the need for breaks was increasingly felt, and here and there spasmodic efforts were made to form the necessary shelter. In many cases a single line of trees was planted, the lower branches of which soon become scanty and allow the wind to pass through unchecked. In some cases

good breaks have been formed round orchards, but, generally speaking, little was done towards making efficient plantings. In the past, doubtless, the need for breaks in many districts has not been so great, but present and future needs make it imperative to give attention to this matter.

Advantages of Windbreaks.—Briefly, what are the advantages to be gained from windbreaks? Firstly, they break the mechanical force of the wind, thus preventing undue damage to orchards caused by breaking off of limbs, blossoms, and fruits. The production of blossoms, fertilization, and maturing of fruits cannot be satisfactorily carried out in places open to the full force of high and frequent winds. Further, the lodging and damage by wind of other farm crops, such as maize, etc., can be prevented largely by suitable shelter belts.

Secondly, they provide a very necessary shelter for stock of all descriptions. To see a mob of cows or sheep huddled beneath a tree during the bitter winds of winter is to realize that the health and well-being of stock demand the provision of some efficient shelter. Too much food material is wasted in "warming the wind," or in meeting the increased demands of an exposed body. Sheltered animals require

Windbreaks break the mechanical force of the wind and protect orchards from wind damage

less food. Stockowners agree that mortality among sheep, particularly during lambing and shearing seasons, would be considerably lessened if good shelter were available. Animals clearly demonstrate their need for shelter, and if the stockowner were to provide it he would add considerably to his profit.

Thirdly, windbreaks prevent soil erosion and removal of topsoil due to unrestricted wind action. This is particularly in evidence where light soil predominates and little natural cover exists. The effects of dust-storms are mitigated.

Fourthly, they reduce evaportation and help to conserve the soil moisture. Where the wind is unrestricted, evaporation goes on at a rapid rate, and in most of our New South Wales districts the existing rainfall is barely sufficient for crop needs. It therefore becomes necessary to conserve what moisture already exists. In the immediate lee of a windbreak evaporation is reduced by as much as 60 per cent and actually at one point it has been shown, under ideal conditions, to reduce evaporation by 70 per cent. The protective zone of a break varies with local conditions, but, generally speaking, it shelters an area equal in width to ten to twenty times the height of the trees. A narrow strip is also protected on the windward side. In the protected zone the average reduction in evaporation is round about 30 per cent the moisture retained in the soil being available for crop needs. The actual result of a windbreak in reducing evaporation is therefore equivalent to a fairly large increase in rainfall. Areas unsuited for certain crops by reason of an insufficient rainfall might, therefore, be made to grow them profitably if protected by efficient breaks.

Fifthly, when planted near dwellings they add greatly to the personal comfort of the farmer by protecting the home buildings from the extremes of winter cold and summer heat, and from dust storms. The home is made an infinitely more pleasant place to live in if the owner will go to the small amount of trouble entailed in planting a belt of trees. The value of the property is also measurably increased.

Sixthly, they provide shelter and nesting places for birds which assist in the battle against insect pests. The preservation of native bird species will be favoured by the retention of natural stands of trees.

Lastly, when planted on a big scale they can be made a source of timber and fuel supply for farm needs, and even assume the character of a tree plantation, the advantages of which will be dealt with later.

Possible Drawbacks

The advantages of windbreaks and shetler belts are, therefore, of a rather obvious character, but to be quite impartial any drawbacks must also be noted.

In the first place, a windbreak occupies a fair amount of ground, and where land is valuable the owner might hesitate before devoting it to tree growth, as the area so occupied is lost as regards ordinary crop production. On the other hand, such an area must be regarded as producing a valuable crop of a different sort, viz., fuel and timber, and at the same time as benefiting and increasing ordinary crop production in the sheltered area. The protective value of a break is at least equal to the yield of a strip as wide as the height of the trees, and under most conditions would exceed this. The area bearing windbreaks, therefore, would yield in excess of that of a similar area of unprotected ground. Even supposing that the windbreak has no timber value, by protection alone it pays rental on the ground occupied equal in value to the yield from crops. In single-row breaks the area occupied is really only that of a fence, and the beneficial effects far exceed the damage done by shade and sapping. The timber, on the other hand, will be knotty and only suitable for posts and rough purposes.

Tree-lots Are Useful in Farm Management

- **They supply timber and fuel**
- **Provide a profitable crop for unused land**
- **Give shelter to stock, crops, and buildings**
- **Help to reduce erosion**
- **Provide homes for useful birds**
- **Are a source of revenue through sale of products**
- **Provide fodder trees for drought periods**
- **Add value and beauty to the property**

A disadvantage of windbreaks is that the trees composing them rob adjoining ground of moisture and food material. The amount of mineral sustances lost may practically be disregarded, as the majority of plant-foods removed are returned to the soil in the form of leaf litter.

Loss of moisture by sapping is evident in a fairly wide zone, and varies according to a variety of conditions. The degree of loss depends primarily on the extent of the lateral and particularly surface development of the trees' root systems, and this in turn depends on the species of tree, amount of available moisture in the soil, fertility and texture of the soil, and the nature of the subsoil. Where the soil is light and poor, the subsoil impermeable, and the rainfall low, lateral and surface rooting is marked, as the roots have to travel far afield for moisture and food. Some tree species are particularly vigorous in their

development of lateral roots, and where land is valuable only those species should be planted which rob as little as possible adjoining soils.

The effect of sapping will be felt most by annual crops and least by perennials with deeper and more extensive root systems. The effects of sapping can be reduced to a minimum by deep ploughing or even trenching every year along the windbreaks to cut off surface roots, and by deeply ploughing the site for the break before planting, so as to encourage deep rooting. Shading has often a more serious effect on adjoining crops than sapping, and where it is fairly extensive it is advisable to plant a strip, including all the shaded area, with crops such as lucerne, clovers, grasses, etc., the value of which is not dependent on the production of seeds and fruits. Growth of the vegetative parts of crops is not so materially affected by shady conditions.

Usually, however, the crop gain in the protected zone is more than sufficient to balance the effects of shading and sapping. It would appear, therefore, that the balance is heavily on the side of the windbreak, and its claims can hardly be ignored by the orchardist, farmer, or pastoralist.

Shade and Shelter Trees

Scattered single trees or clumps of trees are necessary, particularly on pastoral and dairying areas, for the protection of stock during the heat of summer and the cold winds of winter. In many districts paddocks have been cut right over when clearing, and no provision made for shelter or shade trees. In our western districts especially stock have an imperative need of sufficient shade for summer months, and in big open paddocks they are usually found gathered under the sparse shade of the few trees left standing.

Generally speaking, the settler has been too free with the axe in certain districts, and he frequently justifies his action by stating that it was necessary in order to provide a good growth of grass. Standing trees, however, within limits, do not interfere with the value of land from a pastoral point of view. Out in our western districts trees undoubtedly improve pasture land, apart from their shade and fodder value. When denuded of trees the surface soil is swept away. Moreover, the leaves provide a litter in which the seeds of native grasses lodge and find a suitable seed-bed.

Experimental work in other countries has shown that, although treeless areas frequently carry the best grass for the first 10 or 12 years, after that period their value as pasture steadily deteriorates, until they sometimes become converted into barren wastes. On the other hand, tree pastures, provided they receive correct attention, maintain their fertility more or less indefinitely, and are markedly superior in periods of drought.

Shelter and shade trees might be provided with advantage around stockyards, sheep pens, and poultry runs. Animals in these enclosures require some protection, and shelter trees would benefit stock apart from adding to the apperance of the place.

Deciduous trees are often of particular value for such purposes. They give useful shade in summer but allow full access of sunlight in winter.

Fodder Trees

The advantage of having fodder trees on pastoral areas has been so frequently demonstrated during periods of drought that most pastoralists recognize their importance and are providing for them to some extent.

Fodder trees also function as shade and shelter trees, and thus have a double value, but shade trees other than fodder trees should also be provided for, as fodder trees when lopped cease to function as shelter trees, and this at a time when shade is urgently required, viz., droughty periods.

In many parts of the Western Division drought years are fairly regular in their occurrence, and it becomes a matter of common sense to make provision for them. Fodder trees provide feed, which, although often of moderate nutritive value, should only be regarded as a famine standby. Their real value is in tiding stock over a period when grass and other herbage has failed.

In many districts nature has provided a large number of useful fodder trees, and these should be conserved by careful lopping and protection. In the past many valuable fodder trees have been destroyed by ruthless lopping or cutting down the whole tree, drovers and people with no permanent interest in the district being the worst offenders.

Lopping necessitates a certain amount of care and labour, but any trouble taken is amply repaid by conserving intact the source of supply for future years. Many of our native trees will stand fairly heavy lopping, but the degree of severity varies with different species. Some trees require two or three good leaders to be left uncut, whereas other species will stand a general pruning. Cuts should be made as cleanly as possible, in order to prevent undue injury to the tree and the subsequent entry of fungus and insect enemies. Lopping can also be made a method of improving the shape of the tree and increasing its future yields of leafy material.

Care Necessary when Scrub-cutting—A number of precautions should be taken when scrub-cutting for stock. In the first place, it is not

advisable to let the stock become weak before cutting is commenced. Scrub feed will keep healthy stock in fairly good condition, but once they are allowed to become weak and poor the effects of scrub feeding are not so beneficial.

In the second place, it is advisable to mix the ration as much as possible, that is, to cut from several species. If fed solely on one species the stock frequently suffer, whereas a variety makes for a better balanced diet. In the absence of succulent food, constipation and impaction are likely to occur among the stock, and the use of a lick made up of 5 to 15 per cent Epsom salts, 5 per cent bonemeal, and the balance coarse salt is recommended. If available, molasses could be used to increase the palatability of the lick.

Experience with fodder trees varies considerably, even in one district. A certain tree may be regarded as extremely useful by one stockowner, whereas his neighbour may have a poor opinion of it.

Evidence as to fodder value is very contradictory, but probably if we were in possession of all the facts such contradictions would be easily explained. Certain trees, however, are very puzzling. The wilga is a tree which is apparently relished by stock in certain parts and rejected in other districts. Even in the one paddock there are certain individual trees which stock will eat, and others which they leave strictly alone. Whether it is explained by a certain stage of growth, by minute inherent differences, or by certain chemical differences in composition, is a matter for future investigations.

The stockowner has to form his own individual opinion, although often he can be guided by the experiences of others. Certain trees should not be fed when moist with dew or rain, and others should be cut a day or so before feeding, giving the leaves time to wilt.

Apart from the conservation of existing trees, there is much to be gained from forming plantations of the best fodder trees. Little has been done in this respect, but there are examples of well-grown plantations or small groves which reflect credit on their owners foresight and energy. The labour involved in starting a plantation is not great, the chief items being preparation of the ground and protection from stock by a permanent fence. After planting, the trees require a little attention, especially during the first few years, but any spare time can be devoted to this work. In certain parts where conditions are very unfavourable for tree-growth, the failure of planted trees may prove disappointing, but in such districts only those species which occur naturally in the surrounding country should be planted, together with those species which have proved their hardiness.

Tree Plantations or Wood-lots

In the early days of settlement the sound of the axe was loud in the land and the noise of crashing trees was the note of progress. Forest growth was a hindrance to the spead of cultivation and pastoral areas, and under such conditions was regarded as an obstacle and as something to be destroyed. The wealth of the forest was exploited, the best species cut out and the inferior ones left in command. Wide tracts of cleared land were driven into the heart of the forests and small attention was paid to the problems of the future. These problems lay in a possible shortage of timber, the erosion of the land surface due to forest destruction, and similar changes due to interference with the balance of nature. When the settler needed timber he had only to take an axe into adjoining belts of forest. As settlement progressed these in turn were cut out, and people requiring timber and fuel were compelled to go farther afield.

To-day in certain districts there is a marked lack of timber supplies for local needs. Even fuel has to be carted 10 to 20 miles where previously it was available practically at the farmer's door, and when timber is required for fencing or building the farmer finds he has no longer a convenient supply. In many districts, of course, there are still ample supplies close at hand, but even in these a future shortage appears to be inevitable.

It is the business of the Government to see that the State forests are so managed that a supply of timber for future generations is assured, but it is also to the advantage of the farmer and pastoralist to see that a supply is available on his own area to meet his personal needs. No longer can he rely upon the virgin wealth of the forests surrounding him, although sometimes appropriate management (see chapter VI, page 60) will enable remnants of natural forests to be maintained as useful wood-lots. Often he must grow his own timber or buy from those who can supply his requirements. The only reasonable way of meeting this situation is by growing a plantation of trees on his holding, from which he can obtain all his timber and fuel requirements, and possibly add to his income by the sale of its products.

Most farms have certain parts which, by reason of steepness of slope, rocky nature, poor soil, etc., cannot be profitably employed in the raising of an ordinary crop. If natural timber remains this asset should be preserved as a natural tree-lot, thus avoiding the difficulties of establishing plantations where steep slopes must be cleared or trees planted into infertile soil. There is something fine about tree planting, as one is handing down a heritage to generations yet to come. Even more, the preservation of natural tree stands, even if only small areas, is a form of conservation of native vegetation and retains scientifically important information about the pre-existing vegetation of the area.

The Practical Advantage of a Tree Lot.—What are the practical advantages of a tree lot on the farm? Primarily it would provide all fuel, wood, fencing material, poles, and any rough timber required for the homestead and outhouses. This means a saving both in time and money. Further, it would enable the farm area to be utilised to its fullest capacity, providing a profitable crop for the poorer sections. It may take the form of a windbreak or shelter belt for stock and crops. It may be so placed as to prevent erosion of the land surface on steeper slopes and along river banks. Handled correctly, it is useful in enriching the character of poor soils. It provides a breeding place for useful birds, exercises a local effect on climate, and has a real aesthetic value. It also increases the value of the property.

The establishment of such an area is not a difficult matter, and the cost to the farmer is represented by little more than his own time. If the property is already timbered, the indigenous species can be handled in such a way as to preserve a very useful tree lot. The maintenance of the area provides employment for slack periods during the year.

It may be argued that the farmer will not reap the direct benefit of his sowing, owing to the long periods necessary for the maturity of a forest crop. It should be remembered, however, that the farmer will probably only plant species which are quick-maturing, that he will have the benefit of all thinnings, which, after the first 5 or 10 years, are not inconsiderable, and that a well-established tree lot would, moreover, be a decided asset should he wish to sell. Details of the methods used in the establishment of tree lots are given in Chapter IV.

Trees as Screens Round Dams or Tanks

An adequate water supply is an all-important point in the drier parts of the State. Stock are largely dependent on the water gathered in open earthen tanks or dams, and during the hot dry months of summer, particulary when winds are blowing, evaporation from the surface of the water goes on unchecked, and reaches considerable proportions. Often the tank has no protection—or very little—but lies out in the open paddocks subject to sun and wind. A belt of trees on the windward side would help considerably to reduce evaporation. Stockowners agree that loss of water by evaporation often exceeds the amount taken out by stock. In one instance two similar tanks were situated in adjoining paddocks. One was protected by a belt of wilgas, whereas the other was quite bare of surrounding trees. The manager of the property asserted that the unprotected tank was always exhausted long before the other.

It would be a profitable proposition, therefore to maintain a belt of trees on the windward side of tanks, or, in the case of cleared paddocks, to fence off an area and plant it with young trees. Such a break would

also provide shade and protection for stock. Silting up would also be lessened, as in open areas a considerable amount of dust and light soil is blown into the depressions formed by the tanks.

In establishing such a shelter belt care must be exercised in choosing the site. Dams must be cleared out at intervals, and a row of trees too close to the edge would possibly interfere with the movement of tractors and implements employed in removing the silt. On the other hand, if the shelter belt be placed too far from the dam its efficiency would be considerably lessened. In cases where the shelter belt is situated on land which slopes fairly sharply to the dam, the dung of stock which camp in its shelter may be washed into the dam during heavy rains.

Trees around dams prevent it silting up with dust and reduce evaporation

The Utility of Trees in Preventing Erosion

Erosion is often the worst enemy of farmlands and the maintenance of tree cover is a good way of controlling it. The effects of erosion are not limited to the more spectacular and obvious forms of channelling but are often imperceptible. The finer and more fertile particles of soil are slowly washed away, the land gradually becoming impoverished without the farmer realizing the real cause of its deterioration.

Trees provide the best means of fighting erosion due to either rain, stream or wind action

Every farmer can protect his own area by maintaining trees on those parts of his farm where erosion might be expected. The tops of small hills and ridges might be used as small tree lots, and apart from reducing erosion, would provide shelter for stock. A considerable amount of good land is frequently lost along the banks of creeks and streams. In many cases this is due to the action if flood waters, which in turn is caused by forest denudation on the watershed of the streams. The effects are aggravated by the removal of trees and shrubs along the banks of the rivers.

Many of the watercourses in New South Wales have their natural bank protectors in such tree species as river oak (*Casuarina cunninghamiana*), but these trees incidentally provide excellent fuel and fair fodder and have been cut for these purposes, leaving the banks open to the full force of stream flow. By trampling and breaking down the bank edges, stock hasten the process of destruction.

Some of the native trees are valuable in protecting banks, but the willow is, generally speaking, best adapted for this purpose. It is easily propagated from cuttings, is fairly fast growing, and provides fine shade and shelter. Further, it is useful as a source of fodder for drought periods. A limb poked in the ground will often grow into a fine tree,

and any care at all exercised in growing and protecting the cuttings will result in readily-grown trees. At times it is inadvisable to plant willows in small water-courses, or, at all events, close to their edges, as the trees might possibly result in the choking of the channel, and flooding, or diversion of stream flow to adjoining land. Where necessary, the banks of streams should be protected from stock by suitable fences. In some instances a tree lot might be formed along river banks, but usually the ground is too valuable for this purpose.

Ornamentals and other Trees

The amount of tree and shrub-planting carried out by the landowner depends a good deal on his love of beauty, and on his pride in his home. Most people add to the appearance of the dwelling house by planting ornamental trees and shrubs. Care must be exercised in the choice of species, preparation of the ground, and subsequent care and protection of the young plants. The use of windbreaks and hedges will give protection, and ornamental trees add colourful beauty. Often it is advisable to secure the services of a landscape designer to prepare a basic plan which can be implemented as time and finances permit.

When planting the trees recourse should be made to chapter II on planting methods. A good nurseryman's catalogue or the catalogue of trees and shrubs stocked by the New South Wales Forestry Commission tree nurseries will help in selecting species, or the notes in chapter VII can be studied. Another useful reference on both native and exotic species and on planting and management is *Growing Trees on Australian Farms* by A. Brown and N. Hall, 1968, Forestry and Timber Bureau, Canberra.

Trees are of special importance for planting along the driveway to the home from the main road. A well-designed and planted driveway provides a pleasant sheltered access which immediately gives the impression of a comfortable and well-kept property. The owner can take pride in its appearance and gain satisfaction from the fact that it is increasing the value of his property.

Principles of Tree Planting

Tree-planting is not a haphazard operation, but is subject to certain definite rules and considerations. An understanding of the main factors governing the growth, vigour, and distribution of trees is a necessary requirement. Tree-growth is influenced by the countless and varied processes which affect all living matter, but the chief factors may be grouped under the following headings: (1) Climate; (2) Soil; (3) Density of Stand or Planting.

Climate

Climate is the primary governing factor limiting tree-growth. It is a wide term, embracing many factors, the principal being rainfall, temperature, altitude, and degree of wind experienced. In considering the effect of rainfall three points must be taken into account, viz., the total average annual rainfall, the minimum annual rainfall, and the nature of its distribution throughout the year.

In New South Wales the average annual rainfall varies from 10 inches at Broken Hill to about 80 inches in the wettest coastal and alpine areas, and there is a corresponding adaptation of tree-life to meet the needs of the locality. The *minimum* rainfall experienced in a given district is frequently a more important condition in tree-planting work than the average rainfall. In ordinary crop production a severe drought at the worst only results in the loss of the growth of one or two years, but in forestry work a similar drought may cause the destruction of trees which have taken many years to reach their present stage of development. Some tree species prefer a winter rainfall, while other do best where the rainfall comes mainly during the summer months.

Temperature also limits tree-life to a marked extent, wide ranges of temperature imposing very severe restrictions on plant-growth. The degree of frost to be expected is another important consideration, as many species are very susceptible to frost injury. The main damage is done in the young stages of growth, particularly to seedlings, and species otherwise suitable for certain districts where fairly heavy frosts occur cannot be grown successfully unless given special protection.

The degree of wind experienced has a limiting effect on tree-growth, and places subject to high winds are unfavourable for most trees. Apart from the direct damage done in breaking or uprooting trees, the available moisture supply is depleted by evaporation and transpiration. Surface-rooting species are particularly liable to

damage, and the ability to withstand winds is especially important for trees on shallow soils. Some species, however, are able to make comparatively good development, although subjected to high and frequent winds. The Norfolk Island Pine, which is deservedly popular for beach and coastal planting, stands a good deal of wind exposure.

Successful tree planting depends on:

- **Careful selection of species suitable for local soil and climatic conditions**
- **Thorough preparation of the ground**
- **Obtaining good healthy plants**
- **Planting at the right time and following carefully the methods recommended for successful planting**
- **Adequate aftercare for the young plants, expecially in the early stages**

Soil

Soil conditions must be regarded from both chemical and physical standpoints. A chemically rich soil is not an essential for tree-growth, although certain species will not reach their best development except on rich fertile soils. Very little mineral matter is removed in the wood itself, and provided the leaf litter is returned to the soil, the growth of trees demands comparatively little mineral substance from the soil. Certain species flourish equally well on drift sands and rich volcanic soils, but other species demand a more uniform type of soil of moderate fertility. Speaking generally, then although a chemically poor soil will not grow *every* type of tree, yet there are few soils which, by reason of their chemical poverty, will not grow *some* type of tree.

The physical character of the soil is, however, a much more important factor. Thin, rocky soils will not grow good trees, and a fair depth or soil is necessary for proper development. Apart from depth, the main considerations from a physical standpoint are texture, aeration, moisture, content, and nature of the subsoil. Some species demand a loose, porous soil, others a friable loam, while a third class of trees reach their development on heavy clays. Few species will thrive on a poorly drained or wet soil, but even on these soils certain species, such as Swamp Oak (*Casuarina glacua*), Swamp Mahogany (*Eucalyptus robusta*), and some of the tea-trees or paper-barks find their natural habitat. A wet, cold soil, however, considerably restricts the choice of species.

Density of Stand

Under ordinary forest conditions it may be noticed that trees growing close together tend to develop tall, straight stems and few lateral branches. On the other hand, trees growing in the open and with unrestricted freedom tend to branch fairly close to the ground and develop a much branched habit with many laterals. The general appearance of the tree is completely altered by the degree of its association with other trees, and its use is likewise modified. The development of lateral branches means knotty and crooked timber, so that the man requiring straight, clean timber must seek it where the trees grow in dense stands. On the other hand, the person requiring an ornamental tree, or a tree offering the maximum amount of shade and shelter, will allow it unrestricted development.

The shape and habit of a tree, together with the use to which it may be put, depend primarily on the degree of its association with other trees. In the northern brushes the Brush Box (*Tristania conferta*) in competition with other trees develops a long, clean stem with lofty crown. When planted out in the streets about Sydney, and in response to the new conditions of unrestricted freedom and lateral development, it assumes a totally different appearance.

The light requirements of trees also differ considerably, some species growing under conditions of semishade, while others are light-demanding species, and require full light for their proper development.

Considerations in Tree-planting Work

The general influence of climate and soil upon tree distribution just outlined must be taken into consideration when any planting is carried out, and practically governs the choice of species and sites.

Plantings on farm and pastoral areas may be grouped under any one of the following headings:

(1) Cases where a tree is required to develop fully and freely, no restriction being placed on lateral development or branching habit, e.g., shade and shelter trees, ornamental trees, fodder trees.

(2) Windbreaks and shelter belts, where the object is to produce uniform and good lateral development as a barrier against wind.

(3) Plantings for timber and fuel for domestic use.

(4) Plantings for profit.

The success of any planting carried out will depend primarily on the care exercised in choice of species, preparation of the ground, planting, protection, and subsequent care of the trees.

Choice of Species

The selection of the right species is the foundation of all tree-planting work, and the landowner cannot exercise too much care in this matter. A mistake in selection is disastrous, especially as the early growth of a tree is no sure indication of its suitability for the locality. A tree may flourish for a number of years and then gradually die off.

In ordinary agricultural practice a mistaken selection in a wheat or oats variety will only result in the loss of one year's crop, but in forestry work a mistaken selection may result in the loss of many years work. Except in the case of isolated trees or ornamental trees, the landowner cannot afford to experiment, and should limit his choice to those species the success of which in his locality has been proved or is well-assured.

What considerations guide the choice of species? The main points for consideration are:

1. **Purpose of Planting.**—A tree may be eminently suitable for shade and shelter work, but worthless or practically so for timber production, On the other hand, many timber trees give poor shade and are not suitable for shelter purposes. If trees are planted for shade, their use should be restricted to that purpose, and they should not be regarded as a source of fuel and timber. Fodder trees afford useful shade and shelter, but provision should be made for other trees as well, for when lopped during drought they cease to function as shade trees, and this at a time when shelter is most urgently required.

In making a choice, then, emphasis must be laid on the main purpose of planting, and a species chosen which fills the requirements of one particular purpose, rather than a species which has general attractiveness but no particular merit. At the same time, some trees may serve a dual purpose, combining such features as shelter and ornament, and tree lots may also serve as useful shelters and windbreaks. A six-row windbreak may also be made to supply a regular yield of firewood without damaging its efficiency as a break.

2. **Suitability of the Species to the Conditions of the Planting Site.**—This implies a consideration of the local climatic and soil conditions, the main features of which have been previously described. In considering climatic conditions it must be remembered that it is the extremes of temperature, rainfall, wind exposure, &c., that really matter, and the species selected must be sufficiently hardy to survive the worst that can be expected. Soil and subsoil conditions must be noted, and only those species planted, which have demonstrated their capacity for thriving in such a medium. Conditions of the planting site in many cases will eliminate from choice many species otherwise eminently suitable.

3. Hardiness and Resistance to Disease and Insect Attack.—The species selected should not be liable to uncontrollable damage by insects and fungi, and as the farmer can afford to devote very little time to controlling insect and fungous pests on his trees, any species very liable to attack should be rejected. In the case of ornamental trees which receive special attention, liability to attack is not necessarily a bar to selection, as the trees can be treated with the ordinary control methods. Care should be taken to avoid planting trees which could become hosts for orchard or crop diseases.

4. Rapidity of Growth and Longevity.—The Farmer or pastoralist usually requires only species which are fast-growing, as he wants quick results and cannot afford to wait many years for development; in fact, many farmers regard this as the first essential, and consider that their needs can only be supplied by rapidly growing species. Unfortunately fast-growing species, such as many of the wattles, are often only short-lived, and give no permanent results. Further, many of the best and most useful trees are comparitively slow-growing, and should not be rejected on this account alone. However, it must be admitted that rapidity of growth is a useful and very often a determining factor in guiding selection, and it seems that in some cases the best solution would be a compromise. Both fast-growing and slow-growing species should be planted, the former yielding quick results, and when decay sets in or when they have served their purpose they may be replaced by slower growing but more permanent species. By a judicious mixture of slow and rapid growing species, both quick and permanent results can be obtained.

5. Root Habit of the Species.—In windbreaks for orchards and where land is valuable, only those species should be planted which rob as little as possible adjoining land. Species, therefore, with a large development of surface and lateral roots are undesirable in such cases, preference being given to those which are deep-rooting. Where the site is exposed to high winds, surface rooting species are liable to be blown over and should be avoided. Shallow rooting species have their advantages where the depth of soil is only slight, or where the subsoil is impermeable or badly drained.

6. Availability of Young Stock or Ease of Propagation.—A reasonably wide range of species can be obtained from nurserymen, although some very useful trees are not commonly available. By raising ones own plants the range can be extended, the selection being then dependent on the availability of seed supplies and ease of propagation. Some species require special attention for successful propagation, and unless the farmer has both the ability and time for such work, such species should be eliminated.

7. Marketing Considerations.—When planting for profit the needs of the available markets should be carefully studied. A timber may be

intrinsically sound, but there may be no demand for that particular species, or the cost of marketing may be too high.

Preparation of the Ground

The selection of a site will depend on the purpose of planting, and will be dealt with later under the respective headings. It should be noted, however, that although trees will often grow well on chemically poor soil, they will not thrive on shallow soil, and, with the exception of a few species, should not be planted in such areas.

In general forestry work on a big scale it is impossible to prepare the ground for planting as thoroughly as could be desired. Very often the only preparation consists of digging a small hole, or merely inserting the plant in a wedge-shaped notch made by a spade or notching tool. The farmer, however, has only a small area and a limited number of trees to deal with, and the necessary labour is usually supplied by himself in any spare time. Further, he requires quick and certain results, and wishes to secure optimum conditions for his planting. General forestry work can allow for a number of failures, but in windbreak planting, for example, a single failure would spoil the efficiency and effect. Thorough preparation of the soil is therefore necessary.

Where a number of trees are being planted together, such as windbreaks, avenues, or tree lots, the land should first be ploughed. New land should be broken up before winter and allowed to lie until planting time. A plan which has its advantages is to make the first ploughing only deep enough to cover the grass and herbage. Shortly before planting the ground should be cross-ploughed deeply, and then harrowed. Ground previously under crops would probably contain many weed seeds, and to enable the young trees to become established before the weed growth becomes unduly aggressive such land should be ploughed and harrowed, and planted immediately afterwards with the trees. Where hillside planting is being carried out, the ploughing should follow the contour of the hills as far as possible.

Ordinary hole-planting is attended with some risks, especially where the subsoil is impervious. Where trees must be planted in holes, such as in the case of isolated shade, shelter, and ornamental trees, the holes should be made as large as possible. A hole 3 feet by 3 feet and 18 inches deep is desirable. Larger holes should be made where possible. In some localities, if small thrifty plants are used, it is only necessary to make a hole approximately 12 inches deep and the same diameter. Good drainage is essential. This can be checked by filling the hole with water. If some of the water remains after 24 hours then another site should be sought or some form of drainage introduced. Well-rotted manure, compost or leaf litter, if available, can be added to the soil. Where deep digging carries the hole into an impervious subsoil, it is better to make the hole wide and shallow, the depth not exceeding that of the soil. Irrespective of what method is adopted, the preparation of the land should be completed before stock for planting is obtained.

Obtaining Stock

Small plants are often preferable to larger ones. They are more easily handled, less expensive, recover from transplanting more quickly and usually make better and more rapid growth. Large plants in containers are often root-bound and seldom make satisfactory growth. It is better to choose a small actively growing plant than a larger one, the growth of which has been checked. Small plants, however, require more protection during the early years.

The landowner can obtain his young plants in one of three ways:

(1) By growing plants from seed himself, and, where large numbers are being planted, by forming a small nursery, in which all his stock is raised.

(2) By obtaining stock from nurserymen or any other outside source.

(3) By transplanting small seedlings from nearby bush or forest.

The last-mentioned method is not advocated in the majority of cases. Wild seedlings develop a straggling root system, and are difficult to transplant successfully unless obtained when very small. Even if such plants survive the shock of removal, they require extra attention, and often fail to develop into satisfactory trees. Nursery-raised stock provide the most healthy and suitable plants, and if correctly handled show little interruption to their growth and very few total losses.

Raising stock by the landowner himself has much to recommend it, particularly where it is intended to plant a fairly large number of trees. The operations involved are simple, and present few difficulties except in certain species. Details of the work are given later (see Chapter V, page 53), but the advantages of home-raised stock might be briefly summarized. In the first place, such stock has become adapted to local conditions, and these remain unaltered when transplanting takes place. The nurseryman supplying plants may have raised them under very different conditions to those in your locality, and stock raised under such conditions are not always adapted to other parts of the State. In the second place, stock may be planted at the most suitable or convenient time, whereas plants from outside sources have to be put out on arrival, or the trouble, and possible risk of loss taken of heeling in until a more suitable time. In the case of home-grown stock, advantage can at once be taken of suitable conditions that may be very temporary and fleeting. Thirdly, species may be grown which are not procurable from nurserymen. Some of our best shade and shelter trees are not stocked as plants, but seed may be obtained of them. Where suitable trees are to be found in the surrounding country, the landowner can secure good seed at no cost. Fourthly, the cost of home-grown stock is less. Costs of transport are eliminated, and risks of deterioration and faulty handling avoided.

The disadvantage of home-raised plants, however, is that the landowner has to wait 1 or 2 years before the stock is ready for putting out, By buying direct from the nurseryman he gains an initial advantage of a year or two, and this will naturally play a big part in influencing a decision. A further disadvantage is that, owing to the distraction of other work on the farm, young seedlings may be overlooked for a period, and not receive the proper attention. Commercial nursery stock, on the other hand, has continuous and experienced supervision; unless, therefore, the farmer is prepared to give a certain amount of unbroken care and attention to his seedlings, he should not attempt to undertake the work. Failure in this branch might prejudice his interest in other tree-planting work.

Generally speaking, then, when only a few trees are being planted, or where the farmer requires immediate results, stock should be obtained from nurserymen. Where large numbers are being planted, or where the species selected cannot be obtained from outside nurseries, the farmer should raise his own stock. When obtaining stock from nurserymen, care should be taken to obtain the best possible plants, and from a source which is known to be reliable both for healthy stock and for trueness to label.

Planting

When stock is obtained from a nursery the plants will arrive either in containers or open rooted. The former plants will merely require to be placed in a sheltered spot and kept watered until needed for planting out, but open rooted ones should be immediately heeled in. If the roots are at all dry they should be first dipped into a mixture of clay and water, and then placed in a narrow trench in a slanting position, the earth being well pressed down about the roots and thoroughly watered. The soil should be kept moist until the stock is planted out. If exposed to sun the tops should be shaded in some way to prevent excessive loss of moisture. Provided they are properly heeled in, the plants may remain in the trenches for several weeks without injury, but the period should be kept as short as possible. When being removed to the planting site, the roots should be protected by immersing in water, or covering with the wet sacking, as a few minutes' exposure to bright sunlight or to a drying wind will jeopardize their chance of survival.

For open rooted plants, a hole should be made large enough to accommodate the full spread of the roots comfortably, and with a raised mound in the bottom sloping down towards the sides. The roots should be spread over the mound in a natural position, so that no cramping or intertwining takes place, and with the ends of the roots all pointing in a downward direction. Fine soil should be filled in about the roots, firmly pressed down so that no air cavities

are left, and thoroughly watered. After the water has soaked in, remaining soil should be filled in, but kept loose and dry. In this way it acts as a mulch and retards evaporation. Plants should be placed slightly deeper than they were in the nursery to allow for the loose soil settling, but the final depth should be the same as in the nursery.

Plants from pots and ones with balls of earth attached should be planted without disturbing the roots unduly, but some advantage is to be gained by slightly loosening the soil round about the bottom of the roots. Pressing the soil heavily down about the roots, watering well, and mulching with loose, dry soil on the top are the main essentials for successful planting. It is always desirable to leave a saucer-like depression on the top of the ground which facilitates watering and holds moisture. Don't adopt the common procedure of heaping the surface soil up into a mound.

Planting Period

The best time for planting is when the plant is at its resting period, and when moist, cool conditions prevail. Generally speaking, April to September are the best months. Where the rainfall is heavy and conditions generally, cool, the planting period may be considerably extended, but much depends on regional conditions. Where late frosts occur, early spring is the best time for most evergreens, and mid-winter for conifers and deciduous trees. If the spring months are dry, late autumn to mid-winter is the safest period. Open-rooted or balled plants should be planted only when dormant, June and July being the best months. The effects of frosts should be studied. Early or late frosts coming soon after planting should be avoided as far as possible. Plants from containers can be planted at almost any time time of the year, provided they can be watered and protected from undue heat. For any type of plant it is best to choose a cool cloudy day, especially after a good fall of rain.

Sowing Seed *in situ*

In the great majority of cases the landowner will plant the proposed area with young stock, and it is only under exceptional conditions that the sowing of the area with seed direct may be practised. Seedlings on a sown area are exposed to dangers right from the start, whereas in planting, the young stock have been protected during their most sensitive period. In general forestry work sowing seed *in situ* has sometimes many advantages, but the private landowner should rely on planting young stock except in one or two instances. Wattles, for example, may be sown either in lines or broadcast upon ploughed and harrowed land, and usually little trouble is experienced in getting good germination and growth. The native cypresses and some of the eucalypts may also be sown successfully *in situ* under favourable

conditions, but it is necessary to have the soil finely cultivated, especially for small seed, and to be assured of reasonable rainfall after sowing and during the growth of the young seedlings.

Apart from broadcasting seed, the seed spot method may be adopted. In this method spots about 2 feet square are dug and raked to a fairly fine tilth. They are then sown with several seeds, and if a number germinate the most vigorous one only is allowed to remain.

Another method sometimes adopted is, instead of cultivating the entire area previous to sowing, to plough strips several feet wide at an even distance apart, and broadcast or sow the seed in drills on these strips.

Protection and Care of Planted Trees

Any care exercised in planting trees is rendered ineffective unless they are protected from injury, and a degree of assistance is given to their proper development. The chief danger threatening young trees on the farm and pastoral area is damage by stock, and it is useless making plantings unless the whole of the area is effectively fenced off from animal invasion. Stock not only destroy or injure young plants, but by trampling and packing the soil nullify the effect of preparatory cultivation.

The fence should be stockproof, and either permanent in character or sufficiently well constructed to keep out stock until the trees are beyond the reach of the largest animals. As the trees grow older, stock can be admitted from time to time with advantage, as they serve to destroy weed growth and lessen the danger by fire by removing surface litter. A permament fence with a properly constructed gateway permits the regulation of such entry. Where it is only intended to protect the trees until sufficiently well-grown to be proof against stock damage, a barbed wire fence is very effective. Where single shade or ornamental trees are planted out they should be protected by some form of tree guard. Protecting fences or tree guards should be provided for before the young stock is planted out.

Fire causes the loss of many trees, and although in forestry work on a big scale it is easily the most pronounced source of danger, in ordinary farmwork its risks can be reduced to a minimum by a small amount of attention. On such areas local outbreaks are quickly detected, and generally easily checked. Where plantations are made on a larger scale, especially in the case of conifers, and where fire risk is fairly evident, breaks might be made round the boundaries of the plantation. For average farmwork, however, no such provision is necessary.

It may be imagined that an ordinary ground fire running through an area of well-developed trees would do little harm, but such fires are often hot enough to scorch and kill the living cambium layer just beneath the

bark and outer wood, without the tree showing very evident injury. This results in cessation of growth in that portion, and commencement of decay, such fires being often the cause of many trees being rotten at the base. Fire scars are also formed which deepen with every burn, eventually undermining the tree and paving the way for the entrance of timber-destroying fungi and insects. The surface roots of trees are injured and valuable humus burnt out. Any young growth is destroyed.

The area under trees should be cultivated two or three times a year, especially for the first 2 or 3 years, in order to keep down weeds, prevent undue evaporation of moisture, and maintain good soil conditions. Weed growth in the early stages is particularly injurious, as it tends to suppress or completely destroy young tree-growth, especially of the slower growing species. Weeds increase the danger from fire, and reduce the available moisture supply. Under certain conditions weed-growth is of value in providing shelter for trees which are liable to injury by excessive heat or frost and on slopes and shifting sandy soil it assists in binding the soil, but generally speaking, the trees should be kept free from weeds as far as practicable. Where a cultivator can be used, operations are simplified, but where it is not possible to employ a machine, the trees should be periodically hoed around with a mattock or similar implement. Cultivation is particularly desirable in dry areas to conserve soil moisture, and besides resulting in more rapid and better growth, it frequently makes the difference between success and failure. The soil round the trees should always be loosened after rain to restore the surface mulch. Cultivation may usually be discontinued as soon as the canopy of leaves offer protection to the soil, or when surface roots interfere with operations.

In rabbit-infested country the trees may have to be protected by netting. Insects and fungi cause a certain amount of damage to trees, and the landowner, on noticing any such injury, should seek advice from departmental officers.

Mistletoes are prevalent in many parts and do considerable damage unless checked. Young trees become deformed, and the vigour of older trees is impaired. Mistletoe growth should be removed as soon as observed. As the roots of this parasite extend below the surface of the wood, and send out new shoots if only the external part is broken off, care should be taken to remove the cortical portion as well, and to suitably dress the wound. Where possible, the whole of the branch infested should be sawn off and burnt.

In many cases there will be a small amount of loss in the trees planted, and these should be replaced as early as possible. Most losses will occur in the first month or so, and replanting should be made immediately. If left until the next season, the "replants" will seldom catch up to the older trees, and are liable to suppression, except where spacing is wide.

Manuring

Newly planted trees should not be manured, but fertilizers can be applied after the second year if desired and frequently have a very marked effect. In general, only well established trees should be fertilized.

Nitrogen, phosphorus and potash are the three elements, deficiency of which usually limits tree-growth. A good general fertilizer is one containing 10 parts nitrogen, 8 parts phosphorus and 6 parts potash. To make 200 lb of this 10-8-6 tree food, use 100 lb ammonium sulphate, 76 lb superphosphate and 24 lb muriate of potash. The fertilizer should be applied where the feeding roots are located and not close to the trunk. The feeding roots are generally at the tips of the large roots and these come approximately under the branch tips. The fertilizer can be forked in, or holes can be made with a crowbar in a ring around the tree and the fertilizer added in this way.

One formula for estimating the amount of fertilizer necessary is to add together the height (in feet), diameter of branch spread (in feet) and the trunk circumference (in inches), halving the total, the result being the number of lb of fertilizer needed.

Windbreaks and Shelter Belts

The desirability of windbreaks, shelter belts, and tree-lots from the point of view of efficiency in farm management has been discussed in detail on pages 5 to 17. If the farmer or pastoralist has decided to establish any of these features, the success of the work depends largely on the adoption of correct methods and planting plans. Success in all tree-planting work is based on a number of factors, including choice of suitable species, procuring of good stock, preparation of the ground, careful planting methods, and subsequent protection of the young trees. Attention to such details means successful establishment and growth of the individual trees, but the efficiency of a break, shelter belt, or tree-lot depends also on its collective character, and the relationship of the individuals composing it one to another. Mode of formation and planting plans are therefore of equal importance to care of the individual trees, as it is as a collective group that windbreaks and shelter belts perform their functions.

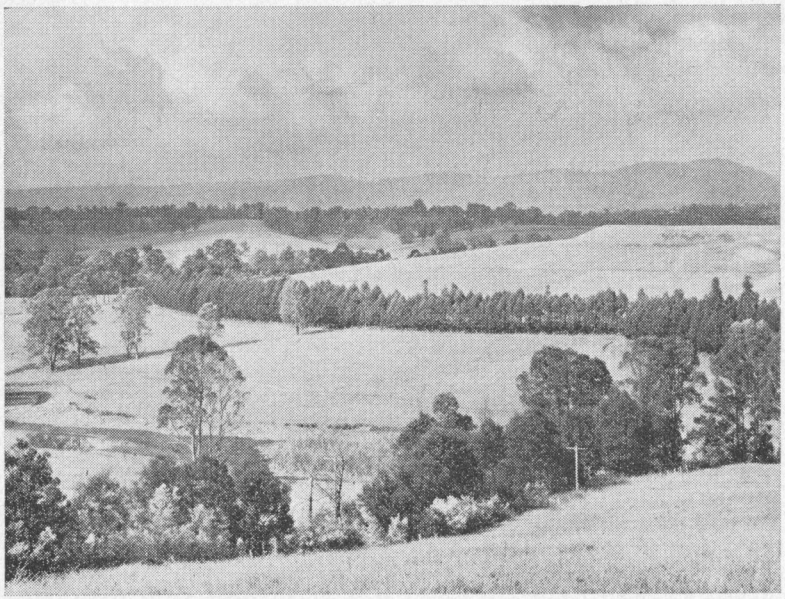

Windbreaks prevent soil erosion, conserve soil moisture, and add beauty to the countryside

Planning the Windbreak and Shelter Belt

The object of these formations is to protect the largest possible area from the effect of injurious or unpleasant winds. This result is secured by the planting of a row or belt of trees at right angles to the direction of the wind against which protection is sought. This may not be the prevailing wind but the most destructive one. Both the efficiency of the break and its landscape effect are increased, however, if it be placed somewhat obliquely or curved, instead of strictly at right angles to the direction of the wind. The selection of a site is often so limited by the needs of the locality that there is practically no choice in the matter. For instance, in a fenced paddock containing field crops or fruit trees the site is confined to that fence which is most nearly at right angles to the prevailing wind. Where stock are to be protected, however, the choice of a site is much more varied, as the shelter belt need not necessarily be placed along a fence line, but anywhere within the paddock itself.

In many districts destructive winds may come from more than one quarter, so that where only one belt is being planted a choice must be made as to which wind is the more harmful. Generally speaking, in New South Wales the most violent and destructive winds come from the west and south-west, so that the windbreak, will run from northwest to southeast, or from north to south. Hot, drying winds and cold, raw winds often come from the same quarter, according to the season, but at times a choice must be made as against which type protection must be established. The choice will vary with the subject to be protected, as bleak winter winds are generally more harmful to stock, and hot, drying winds more damaging to crops.

The most common fault with windbreaks is that they are too open for efficient protection, but it should also be remembered that an absolutely dense and impenetrable windbreak, apart from being difficult to attain, is undesirable. The break should let a little wind go through. This slight movement of air through the break forms a cushion, both on the leeward and windward side, of more slowly moving air which deflects the main volume of wind upwards and prevents it from descending for some distance. On the other hand, if the break is impenetrable, the wind will describe a somersault over the obstacle, ascending violently on the windward side and dropping quickly and strongly on the leeward side, providing practically no shelter except in the immediate vicinity of the break. Further, complete stagnation of the air is undesirable from the point of view of fungous diseases and frost injury. The best vertical structure for a windbreak is dense above but only moderately dense below.

Windbreaks and shelter belts may be grouped, according to the purpose of planting, into four types:

(1) Shelter belts for stock;

(2) Windbreaks for protecting orchards or other cultivation fields;

(3) Protective breaks for homesteads or houses;

(4) Shelter belts surrounding plantations of species liable to wind damage.

Shelter Belts for Stock

Unlike breaks for crops or orchards, considerable latitude usually exists in the choice of a site for a stock shelter belt, as it may be situated practically anywhere within the paddock. Planting along the fence lines is often the method adopted, as the existing fence already provides protection on one side from damage by stock, necessitating the erection of only one new fence. In large paddocks, however, the shelter belt is best situated somewhere, out in the centre of the paddocks, as stock have access to all sides of the belt, and can thus secure protection from all winds. A system of windbreaks may be so arranged as to give almost complete shelter to a given area. Primary breaks are planted across the direction of the most destructive winds and secondary

Shelter belts for stock differ from crop windbreaks by giving shade as well as wind protection

breaks placed in most cases at right angles to the main ones. On large areas belts can be planted along ridges or on the top of small hills, and sites can be chosen which are not producing the best pasture grasses, but which are suitable for tree growth.

The shelter belt may be straight, crescent-shaped, or two belts may be arranged in the form of a cross. The last-mentioned shape is particularly effective, as it gives shelter over a fairly large area and from every quarter. Stock shelter belts are different from those of crop breaks, as the former are required to give shade as well as wind protection. Slight modifications are then necessary, so that protection against winter winds is combined with summer shading. Where space permits, the stock shelter may take the form of a tree-lot, thus securing the dual purpose of shelter and timber supply.

Where the four corners of adjoining paddocks meet, a clump of trees may be planted at the fence intersection which will give shade and shelter, and which will occupy land presenting difficulties for ordinary crop production. Similarly a few shelter or shade trees can be planted with advantage in all V corners of the paddocks. Such corners are difficult to plough, and are often the cause of injury to stock.

Crop and Orchard Windbreaks

Windbreaks for crops and orchards are usually more limited in scope than those for stock. Land is generally more valuable, so that only a narrow strip can be spared for windbreak work, and that strip is necessarily limited to the boundary of the orchard or paddock which is most nearly at right angles to the direction of the most destructive wind. Where ground is valuable, the break will be limited to a one- or two-row formation, but where possible, the multiple-row break should be employed. The strip of land to be allowed the windbreak may be calculated at from one and a quarter to twice the height of the trees employed, so that for a break 50 feet in height, fruit trees should be planted at not less than about 30 to 40 feet from the nearest row of the windbreak. The selection of species is also much more limited than that for stock shelter belts, as only those trees with deep rooting tap roots and which rob as little as possible adjoining soil should be used.

Homestead Shelter Belts

Shelter belts about the homestead serve a dual purpose. They increase the comfort of the dwelling, making it a much more pleasant place to live in, and also provide an attractive setting or background for the buildings. They may also be used for screening off unsightly buildings, stock yards, &c.

Very little attention is usually given to the planning of the homestead and its surroundings, but consideration of the needs of the locality, combined with a proper planting scheme, would add considerably to the comfort of the one and the benefit of the others. For instance, where ground is not expensive, a 5-acre tree lot of 100 by 200 yards could be planted on the western side of the homestead. This would not only cut off the bleak or hot westerlies, but would form a source of timber supply for all farm needs, apart from the picturesque effect it would give to the holding. Along the southern side a shelter belt could be planted of one or several rows of trees, according to the ground available. The orchard and vegetable garden could be located within the protected area.

Uses of Windbreaks and Shelter Belts

- **They give shelter for stock**
- **Protect crops and fruit trees**
- **Reduce evaporation and conserve soil moisture**
- **Mitigate erosion**
- **Add to the comfort and appearance of homes**
- **Supply timber and fuel**
- **Provide shelter and nesting places for birds**
- **Improve the value of the property**

Such belts should not be planted too close to the house, as the trees would unduly shade the buildings during the winter months, fire risk would be increased, and tanks and drains would be blocked up by leaf litter. Further, close planting tends to spoil the individuality of the homestead building, more distant planting providing a much more effective background. The nearest shelter should be not much less than 100 yards from the dwelling, the intervening ground being planted with individual shade and ornamental trees if so desired. Planting too close to dairy or stockyards is particularly undesirable as the shading in winter makes them wet and sloppy.

Breaks for Plantations

Some trees which provide valuable timber or are especially desirable, are very liable to wind damage, so that an outer protective row or belt of wind-hardy trees becomes necessary. Farmers, however, are unlikely to establish such a plantation, but where tender or shallow-rooted species are particularly desired or are of especial value, some provision must be made in the way of protective breaks.

In parts of the tablelands, the Californian redwood (*Sequoia sempervirens*) will make good development if grown in a sheltered position. The lemon-scented gum (*Eucalyptus citriodora*) is another species which often requires some protection. In the western districts a protective break or belt of hardy shrubs and trees will frequently permit the development of less hardy trees within the protected area.

Types of Windbreaks

Having considered windbreaks and shelter belts in relation to the purposes they serve, it should be noted that they may also be conveniently classified according to the method of formation. Such a classification would include the following types:

(1) Single-row type.

(2) Double or multiple-row type.

(3) Grove or tree-lot type.

Single-row Type.—The single-row windbreak should only be employed where land is so valuable that only a small space can be spared for protection work. It also serves a useful purpose when used as a supplementary break to the main shelter belt of the multiple-row type. For instance, the main belt may be situated on the western side of a series of paddocks with single-row breaks along the fences of the several paddocks. Where only the single-row type of windbreak can be planted, care must be exercised in choosing only those species which retain their branches to the ground, and which make fairly dense growth. Conifers, such as *Pinus radiata* and *Cupressus* species, are especially suited for this purpose, but other species, such as the turpentine, are also useful. The chief drawback to the single-row type is that the failure of one tree in the break seriously affects the efficiency of the whole, whereas, in a several-row break, the dying out of one or two trees is not so detrimental. Trees, moreover, make the best growth when grown in communities, but the single-row break, if carefully planted with the right species, is often very effective.

Double or Multiple-row Type.—The most effective type, however, is where two or more rows are planted. This permits the employment of several different species of varying height growth, so that the density of the break from top to bottom is more uniform. A windbreak consisting of more than one species is usually the more effective. The ideal windbreak should have more or less the contour of an earth mound with the tallest trees in the centre and graduating down to low, shrubby species on either side. This is particularly the case where the wind comes from more than one quarter, but where the break is designed to protect from one direction only, the formation may be so arranged as to place the shortest trees on the outside row towards the prevailing wind, the medium-sized trees in the central row,

and the tallest on the inside. Both types have the effect of deflecting the wind current upwards and over the protected area.

A two-row break may consist of a row of conifers on the inside with a row of eucalypts on the outside. A three-row break may be formed of a central row of eucalypts with a row of conifers, or other densely growing or compact species, on either side.

A seven-row break is probably the ideal one from the point of view of protection. For instance, in the cooler parts of the State an effective break would consist of three central rows of the Tasmanian Blue Gum (*Eucalyptus globulus*) with a row of *Pinus radiata* on either side of these and a row of cypress occupying the edge of both sides. An effective break which also combines with it some of the usefulness of a tree-lot can be made by planting seven rows of eucalypts. These are allowed to grow until well established as fair-sized saplings, the period necessary for such growth being about 6 to 7 years. The inside row is then cut at ground level and allowed to coppice. Each succeeding year a row is cut, until at the end of seven years the whole of the break has been cut over. In the meantime the coppice growth from the first year's cut has established itself and grown to such a height as to make an effective break. By such a method the effectiveness of the break is maintained, and at the time a regular supply of small timber and firewood is obtained. Successive cuttings have resulted in successive height growths of the coppice, the varying heights making for a more uniform density in the break and a sloping contour towards the direction of the prevailing wind.

Grove or Tree-lot Type.—In calculating the value of windbreaks, it is necessary not only to consider the benefits of protection, but the value of the timber grown. In a single-row break the timber (being very knotty) is of poor quality and suitable only for fence posts and very rough work. Where its protective value is very high, however, as in the case of homesteads and valuable crops such as orchards, the value of the timber may be disregarded. A combination of protection and good quality timber can only be secured in the broad belt or grove. The farmer, however, may not have the ground available for such work as he may consider it too valuable for timber production. The amonnt of space which can be devoted to such purposes depends on a number of factors, but the planting of wide belts is only justified where the combined protective and timber value is at least equal to the value of crops grown on the same area. The method of establishing a grove or tree-lot will be dealt with later.

Spacing

As already mentioned, spacing in windbreaks is necessarily wider than that of plantations for timber, as lateral development of branches is required in the former and not in the latter. Spacing, however,

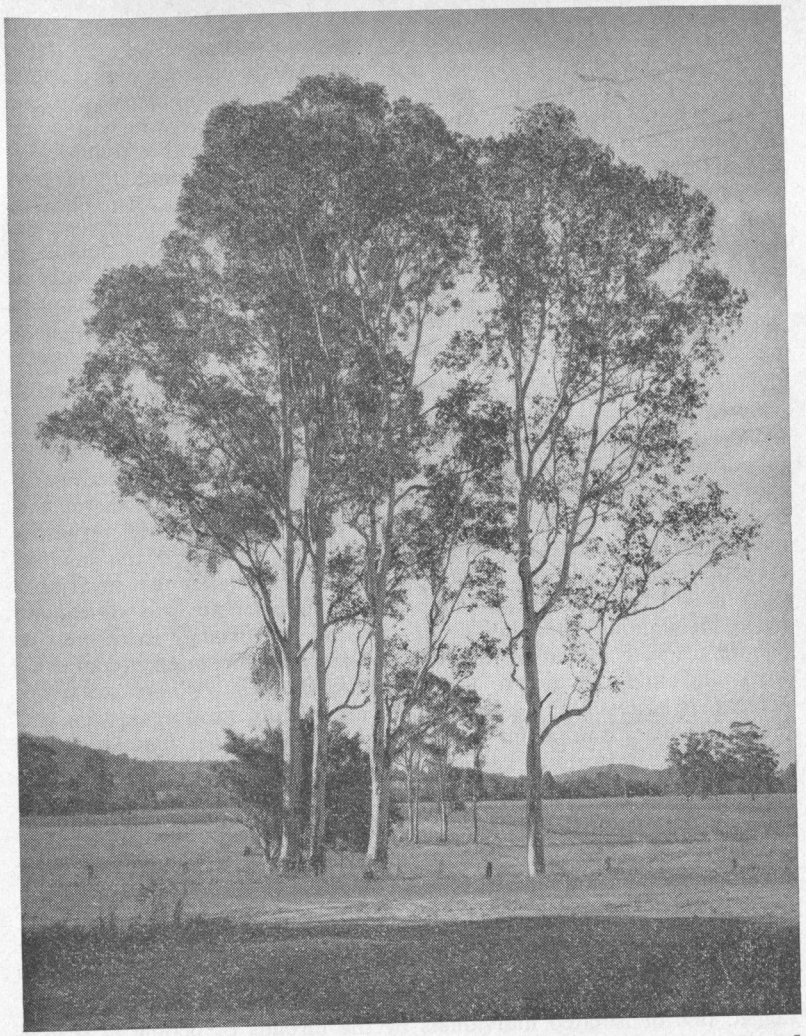

Blue Gums can be grown as a shelter belt and are a fine general hardwood

must not be so wide that the tree will make the same development as if growing in the open by itself. Spacing naturally varies considerably with the species employed. Tall growing species with little lateral development, such as some of the poplars, require as close a spacing as 4 to 5 feet, whereas wide spreading species, such as willows, require very wide spacing. Exact information can only be given when dealing

with a particular species for a particular district, but it may be stated that, generally speaking, in breaks consisting of more than one row, conifers should be planted about 10 feet apart, and eucalypts about 12 to 15 feet apart in the rows, the rows themselves being the same respective distances apart. Closer or wider planting varies with local conditions and requirements. Where more than one row is employed the planting should be triangular, the second row being planted so that the trees come opposite the centre of the space between the trees in the first row.

Preparation of the ground and planting have been dealt with in detail in Chapter II, pages 23 and 25. As regards their application to windbreak formations, it should be remembered that careful preparation of theground is usually necessary for the success of the project.

The sapping effect of a single-row break, especially where it is to be used to protect an orchard or crop field, can be considerably reduced by deep ploughing in order to encourage deep rooting. Careful preparation of the ground and after-cultivation are also necessary, especially for the single-row type, in order to ensure a successful and uniform growth of all trees, as gaps here and there caused by losses make the break both unsightly and less effective. Because of the function they perform, the trees composing any type of break are invariably in a position of great exposure and subject to adverse conditions right throughout their lives. It becomes necessary, therefore, to counteract such difficulties as far as possible by thorough preparatory work and subsequent care for the growing trees. Where stock are present, it is absolutely essential to fence off the windbreak area and protect it from animal invasion, especially during the first few years of growth. Protection against rabbits may be necessary. If any failure occurs among the young plants the blanks should be filled immediately or as soon as conditions are favourable for planting.

Roadside Planting

On many country roads the amount of reserve is fairly large, so that the actual roadway occupies only a portion of the whole width. The native trees have generally been left standing along the margins, but they are often only scattered, and, in many cases, reduced to a ragged line of isolated individuals by the inroads of people in search of fuel and fencing material. Regeneration by natural means is practically impossible owing to the destruction of young growth by passing animals. On the other hand, one is sometimes surprised by a pleasant roadside avenue of indigenous trees which not only add to the beauty of the district, but act as shelter belts and windbreaks for adjoining paddocks.

Where the natural stands of roadside trees are such that fencing or other measures to enable natural regeneration would give satisfactory

results, this approach should be encouraged. Such natural regeneration has added advantages in maintaining something of the appearance and local character of the area as well as preserving information about the original vegetation.

Where roads are sufficiently wide and satisfactory tree growth is absent, planting along the fence lines has many advantages. No encroachment is made on the ground space of the farmer's area, and yet benefits of wind protection and shelter for animals are provided. The trees provide a certain amount of protection as firebreaks, add to the comfort of travelling stock, and beautify the landscape. For shelter belt purposes there is the possible disadvantage that the direction of the roadway may not be the best direction for planting to obtain shelter. In some cases, for example, it may run in the same direction as that of the prevailing wind, instead of at right angles to it, but in a big percentage of cases roadside planting will provide satisfactory shelter. Such plantings are, of course, subject to the approval of the local shire council, but any operation which adds so much to the appearance of the district is likely to receive favourable consideration. Some landowners dislike the presence of trees near their fences, as the effect of sapping in reducing crop yields is regarded as fairly marked, particularly in the case of eucalypt species. Deep ploughing along the inside of the fences, however, reduces this effect considerably, and the landowner must balance against the obvious loss in the small area affected the not so apparent gain over the larger area and the beneficial effects of trees generally.

Roadside planting has benefits for the individual adjoining the road, for passing travellers, and for the community generally, and is a subject which deserves serious consideration, especially in those districts where there is a live community spirit and an appreciation of the advantages of co-operation. For a start planting could be restricted to the main roads of the shire, and, apart from the efforts of the individuals adjoining such roads, the local councils and progress associations could lend their support to a scheme which would reflect credit on their enterprise and add to the attractiveness of their districts. In some cases interference with telephone lines would have to be considered, but usually such lines could be avoided.

CHAPTER IV

The Farm Tree-lot

The main features and advantages of a tree-lot on the farm area have already been dealt with on pages 5 to 17.

In many districts the necessity for such work is not yet apparent, as the natural timber resources of the surrounding country are only partially exhausted, but in other parts the timber shortage is a very real problem. Moreover, it should be remembered that the tree-lot not only helps to utilise the whole of the farm area to its best advantage, but provides shelter for stock and crops, adds attractiveness to the landscape and increases the sale value of the farm.

Planting for Profit

In special cases the tree-lot can be made a source of revenue by the sale of its products, including ordinary logs for milling, pit props when in the vicinity of mines, fuel for country towns, or by raising of special crops, such as wattle bark, material for essential oil distillation, or Christmas trees.

Planting for profit is a matter which requires careful consideration of financial, marketing, and other problems. The landowner requires comparatively quick returns and a certain market for his products. Apart from special crops previously mentioned, the object of most plantations grown for profit is to produce good millable timber of a sort for which there is a demand. Undoubtedly the biggest demand in Australia is for softwoods, and the great majority of plantations will consist of these. Australia is rich in hardwoods, but by far the biggest percentage of softwoods used is imported from overseas, as our natural supplies are small and in the process of being rapidly exhausted. Although our hardwood forests are extremely useful, the big demand of the timber market is for softwoods, which constitute about 80 per cent of requirements. A market for softwoods, in Australia would therefore appear to be definitely assured, and any crop of properly grown trees will always command a good price, especially as the shortage is likely to be felt more keenly in the near future.

Facilities for marketing form the next consideration; the plantation should be within easy hauling distance of the nearest railway or water transport, so as to reduce cost of marketing the products. The actual financial return to be expected from the growing of softwoods is

rather indefinite, as few properly grown plantations have been actually marketed. The possibilities of the markets have, however, been tested on several occasions by the sale of plantations, chiefly of *Pinus radiata*. Although this species does not appear to be a first-class softwood, it has commanded good prices in the majority of cases.

It appears quite certain that most softwoods will continue to command a reasonably good market, but the landowner contemplating the growing of plantations would be well advised to consider the claims of those species yielding a better grade timber. These species are often not so fast growing as ones supplying inferior timber, but the better quality product ensures a good market and probably results in a better financial return in the long run.

Before the landowner decides to plant an area for profit he should, however, consult the local forestry officer, or seek advice from the Forestry Commission, as to the possibilities of the venture. Special crops grown for profit are referred to late in this chapter. The ordinary tree-lot, however, which is used as the source of timber requirements on the farm, although not primarily planted for direct profit, returns dividends in the form of timber and fuel supplies, shelter for stock and crops, and aesthetic improvement.

Choice of Site

The underlying idea of the farm tree-lot is to utilize the spare parts of the farm area which are not considered suitable for raising profitable crops. Often such portions have soil considered poor from the point of view of ordinary crop production, but which will support satisfactory tree-growth. On the other hand, unless land is valuable, the selection of a site should not be restricted to such parts, but, bearing in mind the value of tree products, a portion of better soil set aside. When planting for commercial profit it is especially necessary to see that the site selected will provide, as far as possible, optimum conditions for the species selected.

In many districts 10 per cent of the farm area could be well-devoted to tree-growth. In any case, it is essential that the soil be deep, as shallow soil is not suitable for trees, with the exception of a few species. This is particularly the case in districts where the rainfall is not heavy. Most trees do best on a porous, well-drained surface soil with a fairly retentive subsoil, but usually some trees can be found which are suitable for any particular soil type. Where desirable, the site may be selected with a view of providing shelter or a windbreak for certain paddocks, or of forming a protective and oranmental setting to the homestead. Where natural trees remain these may determine the site as they may be maintained as a valuable and attractive tree-lot.

Choice of Species

The choice of species, apart from the general considerations outlined earlier, will depend on the main object of the plantation. If fencing material or rough timber are required, then hardwood species will be the most suitable. For providing fuel, both hardwoods and softwoods are suitable, and quick-growing species like the acacias have special advantages. To provide timber for building, fruit cases, etc., softwood species or the lighter timbered eucalypts may be planted. If it is proposed to raise milling timber for sale, the plantation should consist of softwoods. For mining props and similar material some hardwood, should be planted. The actual choice will, of course, depend largely on climatic and soil conditions. Species suitable for the different districts in New South Wales are given at the end of this bulletin, but, in any case, the farmer should restrict his choice to those species the successful growth of which is assured for his particular district.

The plantation may be a pure one, consisting of a single species, or a mixed one, consisting of two or more different species. Where a mixture occurs, the trees are often not so liable to damage by insects, fungi and wind, and tender species mixed with hardy ones are protected by the latter. Some species, such as red cedar and hoop pine, are hard to raise successfully except in a mixture. Pure plantations, on the other hand, are more easily handled, as the requirements of only one species have to be considered. In some cases the conditions of the locality are particularly suitable for one species only, and grow that species at its optimum. Conifers, such as *Pinus radiata*, are the most suitable for growing in pure plantations, and any plantings for direct profit will probably be limited to one species. In any mixed plantation it is not advisable to have more than two or three species, and species of approximately equal rates of growth are required.

The ordinary farm tree-lot is expected to supply all wood products of all sorts and sizes, so that a mixture of species is often desirable and even necessary. At the same time, any attempt at complicated mixtures should be avoided. A durable hardwood suitable for fencing material, etc., might be mixed with a softwood which would provide casing material and ordinary timber. The mixture may be of individual lines, or groups. In many cases the total area of the tree-lot can be divided into two or three parts, each of which is devoted to the growth of one species only.

The importance of careful preparation of the ground by ploughing and cultivation may again be stressed, such preparation greatly affecting the rate of growth of the plantation and the time taken to establish it.

Generally speaking, planted trees grow much faster and often to better advantage than naturally occurring trees, especially where they receive

some cultivation in the first year or so after planting. Many Australians travelling in other countries have been surprised at the wonderful growth made by our eucalypts which have been planted there. The chief reason for this is that artificially created conditions remove many of the dangers and hardships which are imposed on naturally growing trees, and the absence of undue competition combined with the benefits of cultivation greatly favours improved growth.

Where conditions permit, the planting should be made as regular as possible, the distance between trees in the rows and between the rows themselves being kept constant. Such regularity facilitates cultivation and management. The lines may be kept straight by sighting with poles or stakes, or cords with coloured tapes at regular intervals may be used. Where the site is rough and broken with stumps, rocks or other irregularities, the plants will have to be distributed wherever possible. Trees may be planted opposite each other, or opposite the spaces in alternate rows. The latter method is generally the better one. The plantation should, of course, be enclosed in a stock-proof fence to prevent damage by animals.

A tree-lot of Ironbark and Cypress Pine

Spacing

The spacing of the plants in the tree-lot depends on the nature of the species and the object of growth. Close planting makes for clean timber free of knots, so that where the timber is being raised for milling purposes the spacing should be fairly close. Where only fuel is required the question of spacing is not so important. In the majority of cases the most suitable spacing distance to adopt will be 8 feet by 8 feet, that is, 8 feet between the trees in a row and 8 feet between the rows themselves. This is the usual planting distance adopted for conifers in New South Wales, but a closer spacing 6 feet by 6 feet would probably produce cleaner timber, and, on poor coastal soils particularly, would help to prevent weed growth and establish the forest canopy. Close planting has the desirable feature that the trees grow quickly, shade the ground and keep out grass and weeds, whereas wider spacing lengthens the period during which cultivation is necessary.

Financial considerations and the amount of time that can be spared must also be considered, as closer spacing means more plants to the acre and more time occupied in planting. However, the 8 feet by 8 feet spacing is probably the best to adopt under most conditions; it gives a total of 680 trees to the acre. Such a distance prevents undue development of the lateral branches, but does not involve too much work in thinning. Eucalypts may be spaced somewhat more widely, the spacing varying from 8 to 10 feet, or even more.

Cultivation and Protection

The plantation should be cultivated for the first year or two in order to keep down weeds and conserve soil moisture. Cultivation should be continued until the canopy of overhead leaves is fully established. Any plants which failed to survive the planting operations should be immediately replaced. It is a bad policy to allow any replanting to be put off for too long a time, as the difference in growth tends towards the suppression of the smaller plants. Replanting, at all events, is rarely successful after the first year.

On very rich soils, where weed growth is particularly vigorous, the "cut and mulch" system is sometimes adopted. The weeds are cut down with a scythe and allowed to lie around the planted trees. The covering of dead weeds helps to suppress further weed growth, and acts as a surface mulch. In some plantations, particularly those of conifers, there is a considerable risk of damage by fire. Where such is the case, a break should be cleared round the area and every care taken to prevent fire starting during the dangerous season.

Thinning

The spacing recommended for the original planting has been made close for two reasons; firstly, to ensure the early establishment of a

complete overhead canopy of leaves, in order to suppress weed growth and to conserve soil moisture, and secondly, to induce height growth and to prevent undue development of lateral branches. In the majority of cases, however, if all the original trees were allowed to develop indefinitely, they would tend to become drawn out, the girth development would be poor, and the branches would overlap and eventually die, leaving only a few living branches at the top. The result would be a crop of long slender poles, unable to develop into well grown trees. When too crowded, the trees use up all their energy in contending with their neighbours. The crowded crowns are unable to manufacture sufficient food and the roots have difficulty in obtaining water. Under such conditions little growth is made for many years. In the natural or primeval forest such struggle for existence eventually results in the death of a number of the trees, leaving room for the development of the most hardy and vigorous trees. Artificial thinning, however, will accomplish in a short time what it takes nature many years to perform, and hastens the operation of the natural law of the survival of the fittest,

The success of the plantation and the amount of its ultimate yield are frequently dependent on the proper execution of thinning operations. No hard and fast rules can be laid down in regard to these operations, as they vary greatly with different species and local conditions, and it is practically essential to obtain experienced advice from forestry officers. The general principles and methods of operation, however, may be briefly stated.

Thinning is not commenced until after the branches of the young trees have developed sufficiently to overlap and to establish a complete canopy of leaves over the whole surface. The first thinning is usually made when the weeds and undergrowth have been suppressed and the lower branches have begun to die. The time taken for this to occur varies with the rate of growth of the species and the locality, but with fast-growing species like the eucalypts, it is generally about four or five years after planting. An examination of the trees on the plantation after this period will reveal that some are already showing signs of suppression by their neighbours, while others are making strong, vigorous growth.

When selecting trees for removal in the thinnings, any badly-formed, diseased, defective or poorly developed trees should be chosen. Those trees that have fallen behind in the struggle for existence should be removed in order to allow further development of the vigorous ones. On no account should any regular system of removal be adopted, such as removing every second or third tree, irrespective of its vigour and general healthiness.

Further thinnings are required from time to time as soon as it is noticed that the crowns are becoming unduly crowded. In most cases the object is to have the crowns of the best trees just about touching.

Too heavy thinning is often practised, but should be avoided, as the ground becomes unduly exposed and the redevelopment of laterals is encourages, thus counteracting the intial advantages of close planting. A number of light thinnings is a much better practice than one or two heavy ones. Any openings made in the canopy should be closed again after 3 to 5 years, and the struggle for existence should not be stopped altogether.

The condition of the crown is often a good indication of the need for thinning. Not less than one-third, and often a greater proportion, of the total height of the trees should be occupied by the crown, so that where clean stems are too evident, a thinning is necessary. The process implies a gradual removal of the weaker trees as the best specimens develop. Often the actual final harvest consists of only one-quarter to one-third of the number of the original trees, an original planting of 680 to the acre being reduced to about 200. The thinnings, however, are not without value, and often represent half the value of the crop, depending on the available market for timber of small sizes. On the farm area such thinnings could always be used to advantage for fuel and other purposes. In many cases thinnings will not be carried out to any great extent in the farm tree-lot, as the original spacing will be fairly wide, and as the production of clean, high-grade timber is not so essential for the farmer's requirements. In many plantations of *Pinus radiata* which were originally spaced at 8 feet by 8 feet, no thinnings have been made during the whole life of the plantation. In one case in South Australia such a plantation reached a height of 80 feet in thirty years, with a diameter of 11 inches.

Thinning operations will therefore be limited in some cases to the removal of dead, diseased, or dying trees. Where the spacing of the trees is wide and little thinning is necessary, pruning of the lower branches might be practised with advantage.

Pruning

Artificial pruning is hardly practicable in a large forest, but can be carried out with advantage in the farm tree-lot where only a small area is concerned. It takes the place of, or supplants, natural pruning, brought about by crowded growth of trees, and its practice renders possible a wider spacing of the trees in the original planting. Such wide spacing means less expense in obtaining stock, and planting, more rapid growth, and avoidance of the trouble of thinning operations.

All branches should be cut off smoothly and close to the trunk, avoiding as far as possible any injury to the bark or wood of the latter. Where possible, all wounds should be painted over to prevent infection by fungi or insects. Operations should be carried out when the tree is dormant or making little growth, during winter months. A brush hook may be used for removing the smaller branches, and axes and

There is a good market for softwoods such as *Pinus radiata* in Australia

saws for the larger ones. The branches should be removed in most cases to a height of 20 to 25 feet, the pruning taking place in two or three operations. Pruning is especially desirable with those species like *Pinus radiata*, which do not readily shed their branches. It should be carried out when the trees are quite young, but, unless the trees are widely spaced, not until the lower branches begin to die. In the case of fast-growing species, like *Pinus radiata*, this would be about seven to ten years after planting.

Pruning also helps to reduce fire risk, as the presence of low branches in the plantation might easily convert a ground fire into the more injurious crown fire. In some of the naturally-occurring belts of cypress pine on western holdings, pruning is sometimes practised in order to improve the quality of the timber.

Management

In the majority of cases the purpose of the farm tree-lot will be to supply the farm with its timber and fuel requirements. These are usually irregular, necessitating the removal of a tree or a number of trees at indefinite intervals. Such a system is usually termed a selection system, implying the selection and removal of certain trees in the plantation, as contrasted with the removal of the whole of the trees in

Good quality softwoods are not as fast growing as *Pinus radiata*, but give better returns

one cut. When any trees are removed, the open spaces thus created should be filled with new plants as soon as possible, so that the tree lot is gradually converted into a stand of uneven-aged trees. Such regeneration will often take place naturally, but if conditions are unfavourable for natural regeneration, then planting young stock should

be resorted to. In any case, the whole of the tree-lot should be kept well stocked, and no wide gaps allowed to develop. Owing to irregular removal of trees and consequent irregular planting or regeneration, there will always be a certain amount of young growth in evidence, which should be protected from damage by the exclusion of stock.

In selecting trees for cutting, especially for fuel purposes, it is not advisable to cut only the best trees, unless these have reached their optimum development. Selecting the best trees only will lead to gradual falling off in the standard of the plantation. It is also important to know the number of trees that can be removed each year, so that a continued and regular supply is assured more or less indefinitely. Generally speaking no more should be taken out than what is equivalent to the amount of growth made each year. This amount varies with the size of the plantation, the rate of growth, local conditions, etc., but it can be gauged by the general condition of the tree-lot. If this is becoming too thin, then cutting should be suspended, or, at any rate, reduced.

Where the tree-lot is of fair size, a convenient way of regulating the annual yield is to divide the total area up into a number of compartments, one of which is cut right over each year. If the area is being worked on a rotation of 25 years, for example (*i.e.*, if the period of growth necessary for the desired development of the trees is 25 years) then the area can be divided into twenty-five equal compartments, each of which represents the yield available for one year. As each compartment is replanted or allowed to regenerate naturally after cutting, the first compartment will be ready for re-cutting by the time the last compartment has been used.

When the tree-lot is worked on the selection system, care must be exercised in removing the trees, so as to avoid damage to other trees and young growth. The direction of fall which will cause the least damage should be determined beforehand, and the tree felled in that direction.

Fodder Tree Plantations

Apart from the growth of trees for timber and fuel, there are several special crops which present opportunities of profit to the landowner.

In the drier parts of the State the establishment of plantations of fodder trees to serve as a standby for drought periods has much to recommend it. Where the number of naturally-occurring fodder trees is fairly large, there will, of course, be no need for such plantings, but on many holdings such trees are too few in number or altogether absent. The district may be naturally poor in such trees, or existing ones have been destroyed by careless lopping or clearing.

The growth of fodder tree plantations is well worth while where pastures are insufficient to carry stock over bad periods. Before

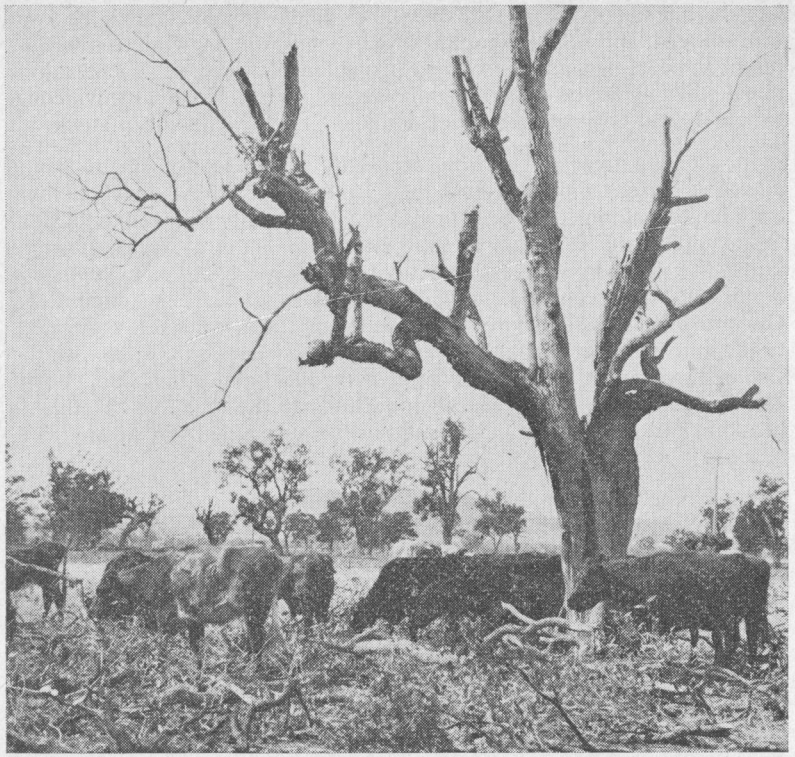

Fodder trees are valuable for feeding stock when grass and other herbage has failed

initiating such work, however, it is advisable to consider whether the local conditions of soil, rainfall, etc., will permit the growth of the particular tree proposed for planting. In some instances plantations have been started, but have gradually failed and finally been abandoned because of the poor growth made by the species selected. In many districts, however, good growth can be obtained from many of the most useful species, such as kurrajong.

It is most essential that the land be carefully prepared beforehand, and the methods of planting followed which have been described elsewhere in this bulletin. In localities where the need for fodder plantations is most pressing, conditions are generally fairly difficult for tree-growing, and the trees require every assistance possible. The plants should be spaced more widely apart than those grown in the ordinary farm tree-lot, as a good development of lateral branches is

required to assure the maximum growth of foliage. Each tree should, therefore, be given sufficient space to enable it to attain its full development. On the other hand, they should be spaced so that when fully grown they practically touch each other in their widest spread, thus providing as much protection as possible for the soil, and helping to restrict weed growth. Weeds and grasses, however, will make greater development than in ordinary timber plantations, owing to the wider spacing adopted. Cultivation should therefore be carried out at intervals during practically the whole life of the plantation in order to ensure the best results. The spacing varies with the species to be planted, but in most cases a spacing of 20 feet would be found satisfactory.

The choice of a site will depend on soil conditions, etc., but if a water supply is available the site should be placed in a position handy to that supply, so that the young stock can be watered with the least amount of trouble. Sometimes, if the plantation be placed near the homestead, it serves the additional purpose of beautifying the dwellings and affording them a certain amount of protection from wind and dust. Such a scheme has been successfully followed at Mungeribar, on the western line. Protection from stock invasion is, of course, essential. The presence of fodder trees in any pastoral area is undoubtedly a big asset, and the trouble and expense of starting a small plantation will pay big dividends in many ways.

Trees Supplying Essential Oils

The extraction of oils from the leaves of various *Eucalyptus* species, whilst once a thriving industry, is now confined to a few areas on the eastern coast of the Commonwealth. The sources of supply are the naturally occurring forest areas, and adequate resources of most species are available to meet the current demand, although in some cases (*Eucalyptus dives*), it has been found cheaper to import the oil from other countries (Africa). It seems inevitable that the establishment of plantations of essential oil-rich species will be necessary to ensure a uniform and continuous supply of oils at a competitive price. A great deal of research has been carried out in recent years in this direction and sufficient data has been accumulated to show that *Eucalyptus* plantations are a practical, commercial proposition. In some marginal areas the return per acre is greater than for wool or wheat.

The main commercial species are *Eucalyptus dives*, *E. fruticetorum*, "*E. australiana*" (a chemical variant of *E. radiata* producing a commercially-valuable oil) and *E. dives* variety "C" (a chemical variant producing an entirely different oil to that of *E. dives* "Type"). *E. citriodora* and *E. macarthurii* oils, at one time used in the perfumery industry, are now no longer distilled in Australia for this purpose, although large quantities of the former are produced overseas. All these trees respond very well to cultivation.

Melaleuca alternifolio, which produces the "tea tree" oil of commerce, is still being distilled commercially, although the naturally occurring stands are quite limited in extent. It produces a highly prized oil with valuable germicidal and other properties and is in short supply on the world market. It is very amenable to cultivation.

Leptospermum petersonii (formerly *L. citratum*), a tall shrub, is now no longer distilled in Australia even though it produces a fine, com-commercial perfumery oil. Its occurrence is restricted and the establishment of plantations to ensure continuity of supply would be necessary for its reinstatement as an article of commerce in Australia. It responds very well to cultivation, and carefully pruned makes an excellent hedge.

Wattle Bark

As the ordinary wattle bark employed for tanning purposes is obtained from species which are native to Australia, it might reasonably be supposed that such growth and production would be carried out largely in Australia. Such, however, is not the case, though wattle bark is grown well and profitably in other parts of the world, notably South Africa. Judging from the large imports of wattle bark into this country Australia is apparently in the process of becoming dependent on the outside world for the supply of one of its own native products. In South Africa the industry is on a very firm basis, about 200,000 acres being under cultivation in Natal alone. The success of the industry there has been undoubtedly helped by the abundance of cheap labour and the suitability of the Natal highlands. It is not proposed to give the details of the methods adopted in wattle cultivation, but merely to draw attention to the possibilities of such work.

Christmas Trees

In other parts of the world quite profitable little industries exist by the growing of small pines and spruces for Christmas trees. Seedlings are planted out at about 3 to 4 feet apart and are ready for the market when reaching a height of 6 to 8 feet. In addition, demand exists for smaller-sized trees. The time taken for the trees to reach marketable size varies from 3 to 6 years. At present little is done in this way in New South Wales, but judging from the large number of requests at the Christmas season for plants or pine branches suitable for transforming into Christmas trees, there should be a good market for trees specially grown for the purpose. The demand, of course, would be necessarily limited, but a market might also be found amongst buyers who wish to plant advanced ornamental trees in place of the usual small plants.

Nursery Work

In most cases the farmer will purchase his stock from nurserymen, but if he decides to raise his own plants the general procedures, as given below, may prove helpful.

The methods adopted in raising young stock vary in detail according to the nature of the species and local conditions, but in general the procedure is as follows:

The Seedbed.—Seed may be sown in boxes, in frames, or in the open ground. Where only a few trees are required, sowing in boxes is probably the best method, as these can receive better attention and are convenient to handle when in small quantities. Boxes about 18 inches long and 12 inches broad and 3 to 4 inches deep are filled with a light sandy loam which has been screened to remove all lumps and pebbles. The bottom of the box has previously been bored with holes, and spread with a good layer of broken stone, pebbles or charcoal to secure drainage, The drainage material should be covered with dried leaves or fibrous material to prevent the soil clogging the drainage holes. It is very often best to use a moderately coarse soil to cover the crocks, making the upper layers of soil increasingly fine. A mass of very finely sifted soil in a box is undesirable, as it has a tendency to sodden when watered and cake hard when drying out. A good general mixture for seedboxes is 4 parts loam to one part coarse sand. The soil should be levelled off with a wooden ruler or similar piece of wood and lightly firmed. The boxes should not be laid on the ground, but should be placed on small blocks of wood or bricks. They should be quite level, otherwise waterings or rain will wash the topdressing and seed to one end of the box.

Where sowings are made in the open ground, care must be taken in the choice of site, the main items to consider being protection against strong, hot, or cold winds, avoidance of frost hollows, good drainage, aspect, watering facilities, and soil. Closeness to trees should be avoided, as the roots of the latter rob the adjoining soil of moisture and plant food materials, besides causing undesirable shading and damage by drip during rainy seasons. Good drainage is essential. The best soil is a light porous loam. Loose soils permit the development of a good rooting system, whereas stiff clays cramp the roots and have a tendency to cake. Sandy soils should be avoided in hot localities. A good and convenient spot can often be found

in the vegetable garden. The ground in any case should be dug deeply and thoroughly, and the soil worked to a fine tilth.

After the seedbed has been prepared drills should be made by tying cord or strong string to small stakes at regular intervals and drawing a pencil or stake, according to the size of the seed, along the lines. Flat-bottomed drills are best as they allow more even distribution of the seed.

If necessary, frames may be made of boards and covered with hessian or similar material. Shading or exposure as required can be obtained by lifting the covering, or rolling it back, according to the method of construction. The bed is outlined with 6-inch boards and a framework built up as illustrated.

If available, tea-tree may be employed for making shade frames. A framework of wood is made, and two bands of hoop iron nailed across, the tea-tree being woven through in sufficient quantity to make the required density. It is further secured at either side by nailing a batten to the framework.

The employment of screens has several advantages; they give protection, make a subdued light for germination and early growth, and prevent undue evaporation after the initial watering. They are removed gradually, and the plants allowed to harden off until ordinary open conditions prevail. Where a number of boxes are being sown it is also of advantage to construct a frame in which they may be housed. Where seeds, particularly large ones, are stolen by birds or vermin, the framework can be covered with netting.

Sowing the Seeds.—The seed should be sown on damp, but not wet, soil, and may be broadcasted or sown in lines, the latter method being usually the best for larger areas, as it facilitates handling, weeding, etc. If the seed to be sown is small, as in the case of eucalypts, the soil should be given a dressing of sand, well-watered, and the seed sprinkled lightly on the surface and covered with fine dry sand. The surface is then lightly flattened with a piece of board. Where sand is not available, a light loam passed through a fine wire sieve will do, but heavy soils should be avoided.

The seed should be sown thinly, as a dense stand of seedlings will cause weak and drawn out plants, and make them more susceptible to destruction by "damping off". With very fine seed, it is often desirable to mix it with sand before sowing to avoid oversowing.

The amount of soil covering given to the seed varies with the size of the latter, a general rule being to cover with a thickness of soil equal to the thickness of the seed or deeper. After sowing, the soil should be kept from drying out, and if necessary watered daily through a fine hose. If boxes are used they may be covered at first with glass or paper to prevent evaporation.

Transplanting from the seedbed or boxes should not be unduly delayed; the small seedlings are "pricked out" in other boxes, in pots, or in lines in the open ground, a hole being made preferably with a round wooden tool, the seedlings inserted, and the soil pressed well down about the roots. The seedlings should be pricked out at distances of about 4 inches apart in the row, and the rows 6 to 12 inches apart. Subsequent treatment consists chiefly in keeping the ground well-stirred and free from weeds, and, if necessary, watered. The time taken for the young plants to mature sufficiently for the final transplanting varies considerably with the species concerned, and with seasonal growth, but generally speaking they are ready for planting in 4 to 8 months after being pricked out into the boxes or lines. With many species, such as eucalypts, which do not transplant easily, it is best to prick them out into pots or tins, so that the roots will not be disturbed when the plant is finally placed out. The average farmer will find that raising the seed in pans or boxes, and pricking out into pots, will provide him with good sturdy stock without much trouble. Where he requires large quantities, however, pricking out into the open ground or even sowing *in situ* will be found much less expensive.

In potting up seedlings, 3- or 4-inch pots are the most generally useful. A crock is placed over the drainage hole, a layer of broken stone or pottery added, and some moderately coarse potting soil run in. The pot is then filled to within about ½inch of the top with sifted soil. The plants should be given some measure of protection, as, for example, provided by a frame. The pots may be "plunged" in an ordinary bed by rowing them out in trenches, and lightly covering them with soil. By this means they are kept cool and evaporation is reduced.

Raising Plants in Tubes.—Raising young plants in tubes has much to recommend it, the handling of young stock being easier. Galvanized iron or tinplate tubes are largely used by the Forestry Commission and are found to be very suitable. The following method of making such tubes is recommended by the Forestry Commission.

> A rectangular piece is cut, 6 inches square, and is bent around a cylinder of wood or metal about 1 inch thick to form a tube 6 inches long. A catch or clip is then made by bending a piece on each of the meeting edges, as shown. A simple tool for bending the catch may be made as follows: Take a piece of flat iron ¼ inch thick, 1 inch wide and 2 inches long. With an ordinary hacksaw, cut a slot lengthwise in the end, ¼ inch deep. The slot is now slipped over the galvanized iron and bent back as far as it will go, and the catch is made. A similar catch, pointing in the opposite direction, is made on the other edge, and the tube is complete. The catches can now be clipped together, and the tube is ready for filling with soil. A mixture of soil similar to that used in the

seed beds or boxes should be used, and it should be well screened to remove all coarse material It should be moist enough to hold together when squeezed in the hand, but not wet or sticky. The tube is filled with soil which is firmly pressed (but not rammed) in, and it is now ready for the seedling.

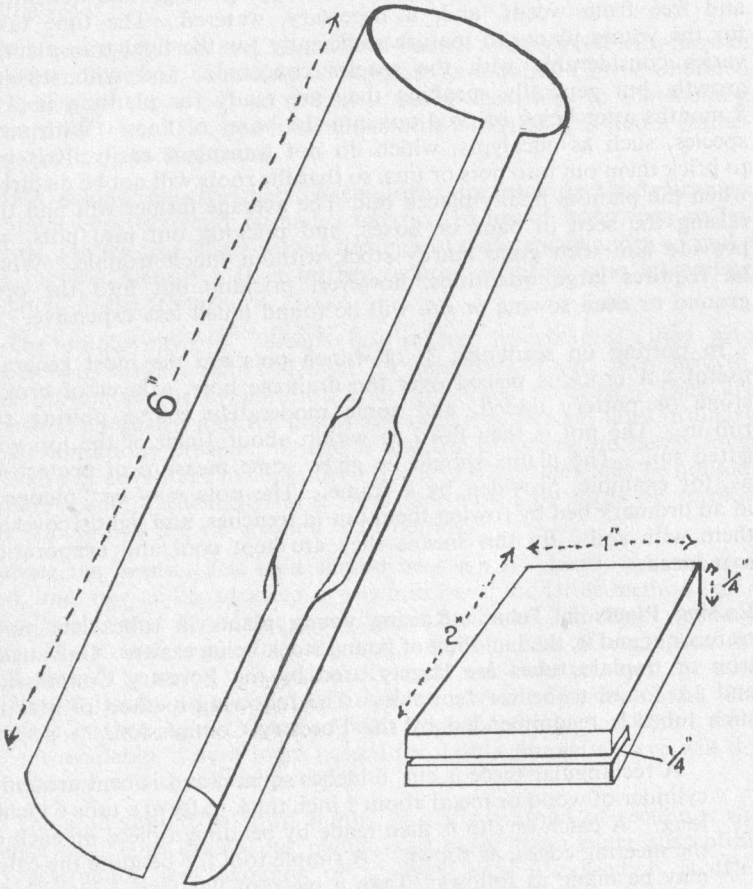

Planting Tube (open) with catch bending tool

If bamboos are available tubes from these can be used with advantage. When the seedlings have developed sufficiently under nursery conditions they can be planted out in the tube. The tube soon rots in the ground and allows the free development of the roots. Pieces about 4 or 5

nches in length are cut from bamboo or large reeds, the nodes being removed so that the tube is open at both ends. A box large enough to hold all the tubes is taken, the bottom bored with drainage holes, a layer of broken stone or charcoal put in, and covered with 2 or 3 inches of soil. The tubes are packed together on top of the soil and their tops levelled off. They are then carefully filled with fine, dry soil and watered thoroughly. Each tube is now sown with two or three seeds, and the whole covered with fine soil. The boxes can be conveniently moved into various situations for shelter and sunshine as required. When planting the tube in the permanent position, provision should be made for subsidence of the disturbed soil about it by placing it one half to an inch below the surface of the ground. Jam tins with the bottoms removed may be used in place of the tubes.

Treatment of Seed.—Some seeds require special treatment in order to ensure the best results. The seeds of wattles, for example, must be treated before sowing, in order to soften the hard seed-coat, which prevents ready germination but allows the seeds to maintain their vitality in the soil for long periods of time. Nature frequently accomplishes this task by the aid of bush fires, which char the seed-coat. Many a man has been surprised at the sudden appearance of wattle seedlings on his land after a fire has swept over it.

Various methods are adopted for hastening the germination of wattle seed, but the most convenient and the one most generally employed is to pour boiling water on to the seed and soak for 24 hours. Often mucilage is formed around the seed and this should be washed off before sowing. Another method is to nick the seed coat with a file and soak before sowing.

Several other species of legumes are best treated in the same way, notably the carob bean, *Robinia*, and Honey Locust. Kurrajong seed is also sometimes treated by soaking in hot water to hasten germination. As opposed to the long continued vitality of the wattle seed, we find that some seeds retain their germinating power for very short periods only. In such cases little time should elapse between taking the seed from the tree and sowing. This applies to such species at the Red Cedar, Teak, and Kauri.

In the case of some of the larger seeds, such as Hoop Pine, walnuts, and acorns, it is often advantageous to sprout the seed before sowing by covering with wet bags or placing in wet sand. The sprouted seed is then placed out in pots or lines, or, if conditions are very favourable, in their permanent positions.

Raising Stock from Cuttings.—Many species set little or no viable seed, and must be propagated by cuttings, while other species are most conveniently reproduced by this method. The cuttings used for striking may be taken from young shoots, half-ripened or ripened

wood, offsets from the base of old plants, or from roots, the source varying with the nature of the species concerned. Hardwood cuttings are made mainly from deciduous species such as the Willow, Poplar, Plane, the Coral tree and many other ones. The cuttings in these cases should be taken from well-matured one- or two-year-old wood, short jointed, densely grained wood being preferred to long jointed softer wood. A good pair of secateurs or a sharp knife is necessary. The length of the cutting should be roughly 6 to 10 inches. In other cases the cuttings are 3 to 5 inches long. The basal cut should be made close beneath a bud or node, as it is mainly at these points that roots are formed. The top of the cutting should be cut at a longer distance above the bud, so as to secure the latter against being killed by the drying back of the wood. The lower leaves are removed from the cuttings.

Many of the evergreens are grown from semi ripened wood taken from firm wood which has completed its growth. Some of the more difficult trees to strike do better if the cuttings are taken with a heel of the older wood. Side growths are used, cutting them from the parent branch with a piece of bark and wood up to ½ inch long attached.

Many conifers can be grown from cuttings, although often taking longer to root. Heel cuttings are used, generally in early autumn, choosing wood that is not too long as the tips must not be cut off. The cuttings should be placed in a fairly loose sandy loam, sharp sand or vermiculite. The last two media have little or no nutriment so the cuttings should be removed to a soil medium as soon as the roots are well-developed. Granulated peat moss can be added in varying proportions, from equal parts to 1 of peat to 5 of sand.

A dibbler is best used for making the holes. These are blunt pointed wooden pegs; a rubber-tipped pencil can be used for thin cuttings. The holes are made 1 to 1½ inches deep, but cuttings from well-ripened wood can be inserted to at least half their length. The cuttings should rest firmly on the base of the hole and the soil should be pressed round it with the dibbler. The soil should be well-watered and kept reasonably moist until the cuttings have struck. The cuttings can be placed in pots, boxes or in the open ground. Glass can be used with advantage, or a polythene bag can be placed over the pots or boxes supported by a wire frame to keep the bag well clear of the cuttings. A warm moist atmosphere is usually best for quick results, but a surprising number of plants can be struck by selecting a semi-shaded position protected from wind.

Collecting Seed.—Where the landowner proposes to raise his own plants, and where trees of the desired species are accessible, gathering seed is an inexpensive and fairly simple operation. Seed should be gathered from mature trees which are free from disease. Care should

be exercised in obtaining only ripened seed, and a knowledge of the seeding period of the tree is essential.

Where the seed is borne in capsules, pods, or cones, these should be collected just prior to full maturity, as complete ripeness means the opening of the seed vessels on the tree and consequent loss of the seed. Seed of eucalypts can usually be gathered during summer and autumn, the capsules changing from green to brown on ripening. A convenient method is to cut off a number of seed-bearing branches and spread them on newspaper sheets until the capsules have fully ripened and shed their seeds. The latter can then be gathered up and sieved. Where small quantities only are required the ripe capsules may be placed in a dry box or tin and allowed to open. The seeds may then be loosened by shaking the box.

In the case of wattles and other pod-bearing trees, the pods should be collected when ripened but just prior to opening. If spread on sheets and exposed to sunlight the pods will ripen fully and shed the seed. The cones of pines should be collected before opening, generally in the spring months.

Succulent fruits, such as drupes and berries, fall off the trees when fully ripened, and may be collected from the ground beneath. The soft outer portion may be gently scraped off before sowing.

When dried the seed can be stored in screw-top glass jars, labelled and kept until the time for sowing. A small amount of DDT placed in the jar will prevent attack by insects.

Improvement and Regeneration of Naturally Occurring Trees

In cases where a farm or holding has been taken up in virgin country the existing trees or forest cover may be utilized to form windbreaks, shade trees, and tree lots, or at least the nucleus of these. In treeless districts, or where the existing trees are poor, recourse must be made to planting, but on many areas nature has already provided useful tree cover. Full advantage should be taken of the natural growth, the complete destruction of all trees by some settlers being due to lack of foresight and a proper appreciation of the value of trees. Fine native trees are often destroyed, the landowner eventually proposing to plant introduced trees, which, in many cases are not so satisfactory, and which take many years to reach the same stage of development.

As natural environments are altered more and more by man's activities, increasing importance must be placed on maintaining the quality of the environment. Preserving natural stands and encouraging their regeneration has advantages some of which are intangible but important in a long-term view. In particular, this maintains some of the visual character of the landscape, retaining vegetation which is distinctively Australian and which characterizes different regions within Australia. Moreover, this preserves scientifically valuable information about the pre-existing vegetation.

Trees, like other species, show regional variation from district to district and there is value in retaining examples from many parts of the range of a species. There is loss of genetic variability if these are replaced by plantings, even of the same species, derived by propagation from a limited range of source material. It is most practical for local samples to be maintained in their natural areas, to which they are adapted.

Most tree species will regenerate in the exposed conditions of areas which are largely cleared. Many smaller native plants cannot survive such conditions, but more would persist than when complete clearing is followed by planting. In addition, native bird populations are likely to be more varied where remnants of natural vegetation are still present. Such areas are also important to the beekeeping industry as sources of honey.

Trees left standing after clearing operations may be divided into three classes:

(1) Shade and shelter trees and those selected for ornamental purposes.

(2) Clumps or narrow belts of trees which serve as windbreaks and for shelter.

(3) Trees which occupy land which is not required for clearing or which is unsuitable for crop production or grazing. Such an area may be a source of timber and fuel.

Shade and Shelter Trees

A large proportion of the indigenous species are naturally fine shade trees, but there are instances where their value can be considerably increased by judicious pruning or lopping. This is especially the case with the eucalypts. Although some of the gums, boxes, ironbarks, etc., make excellent shade trees without artificial aid, some are too sparse in the foliage and of poor shape for efficient shading. Such trees can be greatly improved by cutting, as the majority of the eucalypts produce heavy coppice or sucker growth. Dead and diseased branches should be cut out, the older branches shortened back, and cuttings made to bring the tree to the desired shape. For shade purposes a large spread of branches and the development of dense foliage is required rather than great height growth and sparse foliage, and it is occasionally desirable in the case of tall trees, to reduce the main stem to encourage the formation of lateral development. By such cuttings the amount of wood is considerably reduced, but as the remaining portion has the full root system of the original tree to draw on, thicker and denser growth results.

In addition to eucalypts, other trees are sometimes improved by careful cuttings. In western areas trees which have been lopped for fodder very often throw out compact new growth which makes them much more useful as shade trees. Planted trees may also require some pruning and cutting.

Although the majority of native trees make good sucker growth and respond well to prunings, other species, particularly the conifers, are unable to sucker, and should therefore only be pruned to remove dead, diseased, or unwanted branches.

Winter and early spring are the best seasons for lopping or pruning, the most suitable time being when the tree is at a resting stage, but about to make new growth. Care should be exercised in the method of cutting, especially in the case of ornamental species or the most useful shade trees. Cuts should be made with either a sharp axe or saw, but preferably with the latter, and should always be slanting

so that the surface will not retain water. Particular care is necessary when removing heavy limbs from the main stem. Heavy branches are often removed by a single cut from the upper surface, but the limb in falling generally tears away the bark and outer wood from the trunk immediately below it. This makes a large scar and paves the way for further injury by insects and fungi. Such branches should be removed by the three-cut method. The first cut (*a* in the accompanying figure) should be made on the under surface of the limb about 6 to 12 inches from the point where the final cut is to be made, and reaching about a quarter way through the limb. The second cut (*b* in the figure) should be made in the upper side of the limb an inch or so beyond the first one and continued through until the limb drops. The third cut (*c* in the figure) is made close to the trunk to remove the stub.

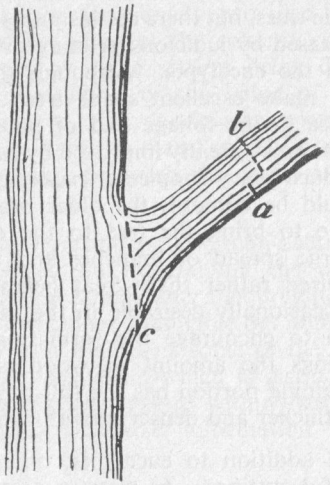

The Correct Way to Remove a Heavy Limb

The same method should be followed when shortening heavy branches. Heavy limbs can also be removed by a single downward cut in cases where the limb is supported by an overhead rope or propped up from beneath. In any case, no projecting stub should be left, as this dies back into the trunk, forming a vulnerable spot for fungous and insect invasion.

Where practicable, the wound made by the cut should be painted over with a mixture of creosote and tar. This both sterilizes the wound and prevents the entrance of water, fungal spores, and insects. On some trees the tar mixture causes a certain amount of local injury, and in such cases a mixture of bluestone in water can be washed on to the wound. When dry the surface should be painted with ordinary paint or varnish. Decayed or infected wood should be removed wherever noticed, and the area painted with the creosote and tar mixture.

Occasionally a tree is damaged by insects, fungi, or fire to such an extent that unless attended to its complete destruction is imminent. In most cases it would pay to remove such a tree, especially as it represents a potential source of infection for other trees; sometimes, however, because of its particular value, or for the sake of associations, it is desired to preserve it. Where preservation is decided upon, the decayed or diseased portion should be completely cut away, the excavation being continued until the sound, uninfected wood is exposed. The newly-cut surface should then be sterilized and painted with tar. In many cases such measures will be sufficient to arrest decay, but attention must be given from time to time to see that no further infection or decay is taking place. In other cases, however, the portion taken away is so large or in such a position that the part requires artificial support, or needs filling to prevent further infection.

For filling such cavities ordinary cement is often used, but this has several serious drawbacks, the chief being that it lacks elasticity, the incorporation of a rigid unyielding mass in a living tree leading to straining and cracking when movements take place. The best material to use is some form of asphalt, an effective mixture being one of tar and sawdust. Wood shavings and sand may be used in place of the sawdust, such mixtures being very adhesive, absolutely waterproof, and possessing the required elasticity. It is often of advantage to fill the cavity only to the level of the cambium layer, as the latter, if uninjured, will promote callus growth, which in time will extend over the cavity and hide the filling.

Shade and ornamental trees with only a few dead limbs should be given attention, but where decay or damage is extensive, especially in the case of quick-growing, short-lived trees, the trouble involved is hardly worth while. In such instances complete removal of the tree and replanting or replacement by natural seedling growth is easier and more effective. Such old trees will often serve as seed trees and natural regeneration will occur if the surrounding area is fenced to exclude stock.

Groups of Belts of Trees for Breaks and Shelter

In some instances landholders have spared from clearing operations narrow belts of trees along fences, roads, and around orchards, or groups of trees in the open paddocks. These serve as windbreaks and for general shelter, and although in many cases they are very effective for these purposes, their efficiency is often impaired, particularly in the case of eucalypts, by their open character and general raggedness. In some districts where eucalyptus growth is unsatisfactory and where adequate regeneration cannot be expected with appropriate management, it may be best to cut over the area and plant with more suitable species such as conifers. Where moderate growth is evident, the natural shelter belt can be considerably improved by judicious cutting and

management to promote natural regeneration. Occasionally, planting is necessary to fill up blanks or open spaces.

In ornamental areas, trees that are too open or of bad shape may be improved by heavy pruning and lopping, or complete coppicing may be adopted with advantage. Coppice growth originates as shoots or suckers from the stump of a previous tree, and is brought about by felling close to the base of the trunk.

It is perhaps the surest and easiest method of securing natural reproduction, and is particularly applicable to old stands of eucalypts which have become unthrifty, the rejuvenating effect being very marked in cases of poor or worn out growth. On the other hand, coppice growth seldom occurs in conifers, the reproduction of which must come from seed. Many of the native trees, however, other than eucalypt coppice freely, as, for example, the turpentine and species of the She Oaks.

During the first few years, coppice has a physiological advantage over seedling growth, as the young shoots have the root system of a well-established tree. Growth during the initial stages is therefore particularly rapid, a growth of 20 feet in 2 years being not unusual in coastal areas. The quick results given and the simplicity of the operation may gain favour in the opinion of the farmer, who, in addition, will find the method of especial value in providing small poles, fencing posts, fuel, or in thickening up a shelter belt which has grown tall but scanty. Coppice regeneration, however, seldom achieves the natural habit or form characteristic of the species.

When cutting for coppice growth, the cut should be made close to the ground, as the resulting shoots are less liable to breakage by wind, are more vigorous, and in some cases establish roots of their own. The cut should be clean and slanting, so that water will run off easily. Either saw or axe can be used, but the former implement is sometimes the better in cases where only one or two strong sucker growths are required from the stump. It has been the experience of some that stumps cut by the axe throw out more numerous shoots than those cut by the saw, and that the coppice growth from sawn stumps is somewhat more vigorous. Winter and early spring are the best periods for coppicing.

Frequently quite a number of suckers arise from the stump, but if left to themselves two or three predominate and force out the others. This natural selection can be helped by artificial pruning, the growth being thinned out after a couple of years. Two or three of the most vigorous and healthy shoots are retained, preference being given to ones having their origin close to the ground.

Coppice from over-mature trees will not produce strong growth, as the old root system has lost its vigour. The practice should, therefore,

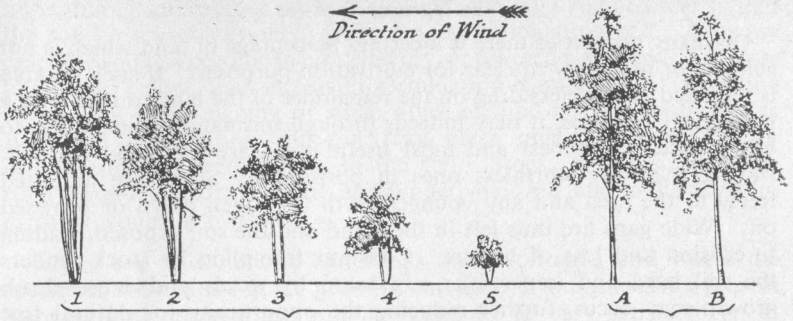

A Seven-row Windbreak of Eucalypts

The sketch shows the method of coppicing suggested; it not only yields fuel and timber for small purposes, but makes an effective break Rows 1 to 5 have been coppiced, one row at a time in successive years in the order of numbering. Rows A and B are original trees, which remain to be coppiced

be limited to those trees which retain their capacity for producing vigorous shoots up to the required height. The number of times that a stump can be worked for coppice growth varies considerably with the species and the condition of the stump, but from a healthy eucalypt stump three or four succeeding coppice growths might be expected, each rotation taking about 15 years to provide usuable small timber.

It should be remembered that the height growth of coppice shoots is limited, and that therefore this method is ineffective where tall breaks or big timber are required. For shorter breaks and for the supply of poles, small timber and fuel, however, the method of coppicing has much to recommend it.

Filling in Gaps or Open Spaces

The shelter belt of naturally occurring trees is often marred by gaps where trees have been removed for timber and fuel. Further, in seeking to make the belt more effective, old and diseased trees may have to be cut out, thus creating additional open spaces.

In some cases, especially where stock is excluded, there will be a certain amount of young seedling growth in evidence, which can be utilized for replacement and filling up work. The value and efficiency of the natural shelter belt can, therefore, be considerably increased by the removal of dead, old, and badly diseased trees, by the coppicing or pruning of those requiring treatment, and by fencing to take advantage of natural regeneration to fill gaps. Rarely, where natural regrowth is inadequate, one may have to resort to planting to ensure continued vigour and productivity.

The Natural Tree-lot

On many properties there is a certain percentage of land which is not suitable or necessary to clear for cultivation purposes. If such an area is regarded as a useless drag on the remainder of the land, rather than a permanent resource, it may indeed, through mismanagement, cease to be an asset. The best and most useful trees are gradually cut out, leaving relatively worthless ones in possession. Stock are admitted freely to the area and any young growth is broken down or browsed off. Wide gaps are thus left in the stand and the soil exposed, leading to erosion and loss of humus. Constant trampling by stock renders the soil hard and impervious. Invasion by weeds and dense shrub growth may occur, further reducing the opportunity for natural tree regeneration.

In some cases the area has been exploited to such an extent that regeneration by natural means is impossible. Clear cutting and replanting is then necessary. But where a fair percentage of useful species are still standing, the area can be made both useful and profitable by establishing conditions favourable to natural regeneration.

Details of the methods adopted vary with local conditions, but, broadly speaking, the following procedure is followed. In the first place, all diseased and badly formed trees are removed and undesirable weed trees cut out. In many cases the undesirable species form a fairly high percentage of the total stand, their development being aided by immunity from cutting owing to their worthlessness. These should be removed, and only those species left which are of general usefulness. Such operations are usually referred to as "improvement cuttings". If the stand of trees is very open, however, such cuttings should not be carried too far, as the removal of cover for the soil militates against the growth of seedlings and favours the development of weeds and grass, which render natural reproduction almost impossible. On the other hand, as in some Cypress Pine areas, the growth of young trees is so thick that a heavy thinning is required in order to allow the development of the remaining trees. For natural regeneration the soil should be shaded to some extent to retain a covering of leaves and mould and to prevent hardening. Where the growth is open, therefore, the weeds should be removed gradually, and only after good seedling growth has resulted from the desirable species. Seedlings from the weed trees should be destroyed.

The trees left standing after improvement cuttings are the potential seed bearers, and on them is dependent the crop of seedlings for regeneration. The parent tree must, therefore, be able to produce good seed in sufficient quantity. Generally speaking, the majority of our native trees fulfil this requirement, although every year is not necessarily a seeding year. Under bad conditions, or in the case of certain species, several years may elapse before a good seeding results.

Assuming satisfactory seed production, the next requirement is that the soil is in a condition to form a good germinating bed. In many cases the soil has become so hard and dry, or covered with weeds and grass to such an extent, that successful germination is impossible. Breaking up the soil by ploughing or some other method is then necessary, as successful germination will not take place unless the seedling on germinating has ready access to the soil. Stock, of course, must be rigidly excluded from the area, as their activities are fatal to the development of young growth.

Where soil and climatic conditions are favourable, and where the species concerned are quick growing and hardy, young seedling growth from natural regeneration will be found to be very satisfactory. If particularly abundant, the seedling growth must be gradually thinned out. Details of thinning operations, spacing, etc., are mentioned later in discussing artificially planted areas.

As previously mentioned, coppice growth can also be profitably employed in the rejuvenation of worn-out tree areas, often in combination with seedling growth. Sometimes, owing to unfavourable soil and climatic conditions, the growth of seedlings by natural means is difficult or impossible. In such cases the regeneration of the tree-lot will depend upon coppicing combined with planting.

Underplanting is also a means of providing new growth to replace a stand of trees when the latter have reached maturity. However, natural regeneration has such advantages, by providing trees suited to the area and by retaining a sample of the local tree vegetation, that underplanting is recommended only where there is no response of natural regeneration following reasonable management procedures encouraging natural regrowth or where the local trees are quite unsuited to the needs the wood-lot must serve.

When planting to fill in open spaces, the same species or same class of trees that already comprises the stand need not necessarily be used. Low-grade eucalypt forests can sometimes be converted to pine forests by planting pines at intervals and allowing the latter to spread naturally. The conversion is slow but inexpensive.

In many of the western districts tree-planting work is rendered extremely difficult by the very unfavourable conditions prevailing, and regeneration by natural means is practically impossible owing to stock eating or destroying young growth. It has been found, however, that by fencing off part of the land a marked growth of the indigenous shrubs and trees results. By keeping them fenced off until they have reached a size where they will be no longer damaged by stock, a fair amount of natural cover is obtained. The natural growth may also be used to give protection for tree-planting work, and in many cases will provide the small increase in favourable conditions which will mean the difference

between success and failure. The fence, of course, must be both rabbit-proof and stockproof. The growth on such areas is often remarkable, and can be used as the foundation of tree-growing work about the homestead and for shelter belts. Conservation and natural regeneration under western conditions are often more likely to meet with success than artificial planting.

The landowner, then, should utilize to the fullest advantage all naturally occurring trees on his holding. This he can do by adopting suitable protection methods, encouraging natural regeneration, and by making any necessary cuttings and coppicings.

Species Recommended for Various Districts

The selection of the right species, suitable for the purpose for which it is needed and for the district in which it is to be planted, is a question of primary importance in tree planting, and particular thought must be given to it.

The recommendations given hereunder are only general ones and are by no means exhaustive, and it is often of advantage to seek advice for particular districts and for special purposes. This can be obtained from the Department of Agriculture, the Forestry Commission and some nurserymen.

In making a selection, the notes given on the various species (see page 79) should first be studied.

THE WESTERN PLAINS

The following list gives the species recommended for planting for different purposes in this Division. All the species mentioned are not suitable for every portion of the Division or for all situations. A selection should be made to meet the individual requirements of a particular locality:

Trees for Shade and Shelter

Wilga (*Geijera parviflora*).
Kurrajong (*Brachychiton populneum*).
Athel Tree (*Tamarix aphylla*).
Pepper (*Schinus molle*).
Silky Oak (*Grevillea robusta*).
White Cedar (*Melia azedarach*). (Deciduous.)
Myall (*Acacia pendula*).
Gruie (*Owenia acidula*).
Belah (*Casuarina cristata*).
Ironwood (*Acacia excelsa*).
Flooded Box (*Eucalyptus largiflorens*).
River Red Gum (*Eucalyptus camaldulensis*). In clumps.
Sugar Gum (*Eucalyptus cladocalyx*). In clumps.
Mugga (*Eucalyptus sideroxylon*).
Willows (*Salix babylonica*). River banks in eastern portion.

Cooba or Native Willow (*Acacia salicina*). River banks.
Wild Orange (*Capparis mitchellii*).
Coolabah (*Eucalyptus microtheca*).
Bimble Box (*Eucalyptus populnea*).

Trees for Windbreaks and Shelter Belts

Group I—Shorter growing species

Wilga (*Geijera parviflora*).
Kurrajong (*Brachychiton populneum*).
Belah (*Casuarina cristata*).
Myall (*Acacia pendula*).
Pepper (*Schinus molle*).
Silky Oak (*Grevillea robusta*).
False Tree Lucerne (*Chamaecytisus prolifer*).
Athel Tree (*Tamarix aphylla*).
Western Pittosporum (*Pittosporum phylliraeoides*).

Group II—Taller growing species

Sugar Gum (*Eucalyptus cladocalyx*).
Mugga (*Eucalyptus sideroxylon*).
River Red Gum (*Eucalyptus camaldulensis*).
Flooded Box (*Eucalyptus largiflorens*).
Bimble Box (*Eucalyptus populnea*).

Group I includes shorter-growing species, from which the outer rows of two or more rowed breaks may be selected, and group II represents the taller-growing species, from which the inner or central row may be chosen. For example, the following combinations may be made: Kurrajong and Sugar Gum, Silky Oak and Mugga, Wilga and River Red Gum. Any of the species from either group may be used for a single line break, or a multiple-row break of one species.

Fodder Tree Plantations

Although a number of the western trees provide useful fodder, it is wise to restrict selection to the best species, viz., Kurrajong. In localities where this tree will not do well, plantations may be made of those local trees which make good growth, such as Mulga, Myall or Supple Jack, as the case may be.

Trees for Timber

White Pine (*Callitris columellaris*, inland form). House construction, etc.

River Red Gum (*Eucalyptus camaldulensis*). General hardwood purposes.
Mugga (*Eucalyptus sideroxylon*). General hardwood purposes.
Flooded Box (*Eucalyptus largiflorens*). Fencing and heavy work.
Belah (*Casuarina cristata*). Fencing and general utility.

Trees for Fuel

The various species of *Acacia*, including Myall (*Acacia pendula*) and Yarran (*Acacia homalophylla*).

The Belah (*Casuarina cristata*) and some of the Eucalypt species might also be planted.

WESTERN SLOPES DIVISION

Where conditions are very dry and approximate those of the Western Plains, the list of recommendations for that Division should also be consulted.

Trees for Shade and Shelter

Kurrajong (*Brachychiton populneum*) F.
Wilga (*Geijera parviflora*) F.
Myall (*Acacia pendula*) F.
*Yellow Box (*Eucalyptus melliodora*).
Pink-flowering Ironbark (*Eucalyptus sideroxylon*).
Fuzzy Box (*Eucalyptus conica*).
Hill Red Gum (*Eucalyptus dealbata*).
River Gum (*Eucalyptus camaldulensis*).
Sugar Gum (*Eucalyptus cladocalyx*).
*Red Stringybark (*Eucalyptus macrorhyncha*).
White Box (*Eucalyptus albens*).
Apple (*Eucalyptus bridgesiana*).
*River Oak (*Casurina cunninghamiana*) F. Along banks of streams.
Willow (*Salix babylonica*) F. Along banks of streams.
Cooba (*Acacia salicina*). Along banks of streams.
Pepper Tree (*Schinus molle*).
*White Box (*Eucalyptus albens*).
*Apple (*Angophora floribunda*).

F. Indicates fodder trees.
* Usually best adapted to the eastern half of the division, or where conditions are fairly favourable.

Athel Tree (*Tamarix aphylla*).
Motherumbah (*Acacia cheelii*). Northern subdivision.
Plane Tree (*Platanus hybrida*) (Deciduous).
White Cedar (*Melia azedarach*) (Deciduous).
Carob Bean (*Ceratonia siliqua*) F.
*Bunya Pine (*Araucaria bidwillii*).
*Kaffir Plum (*Harpephyllum caffrum*)
*Desert Ash (*Fraxinus oxycarpa*).
*Claret Ash (*Fraxinus oxycarpa Raywoodii*). (Deciduous).
*Honey Locust (*Gleditsia triacanthos*) (Deciduous).
Red Ash (*Alphitonia excelsa*) F.
*Monterey Pine (*Pinus radiata*).
*Stone Pine (*Pinus pinea*).
*Aleppo Pine (*Pinus halpensis*). On limestone.
*Cootamundra Wattle (*Acacia baileyana*).
*Queensland Silver Wattle (*Acacia podalyriifolia*).

Trees for Windbreaks and Shelter Belts

Group 1—Shorter-growing species

†Kurrajong (*Brachychiton populneum*).
Wilga (*Geijera parviflora*).
Myall (*Acacia pendula*).
Wild Olive (*Olea africana*).
†Tree Lucerne (*Chamaecytisus prolifer*).
Motherumbah (*Acacia cheelii*).
Athel Tree (*Tamarix aphylla*).
†Carob Bean (*Ceratonia siliqua*).
Camphor Laurel (*Cinnamomum camphora*).
Agonis flexuosa.
Pepper Tree (*Schinus molle*).
†Osage Orange (*Maclura pomifera*). (Deciduous.)
Cootamundra Wattle (*Acacia baileyana*).
Some Cypresses.

F. Indicates fodder trees.

* Usually, best adapted to the eastern half of the Division, or where conditions are fairly favourable. Some require some artificial watering for successful establishment.

† The most suitable ones for orchard breaks.

Group II—Taller-growing species

Monterey Pine (*Pinus radiata*).
Canary Island Pine (*Pinus canariensis*).
Aleppo Pine (*Pinus halepensis*).
River Gum (*Eucalyptus camaldulensis*).
Hill Red Gum (*Eucalyptus dealbata*).
Yellow Box (*Eucalyptus melliodora*).
White Box (*Eucalyptus albens*).
Apple (*Eucalyptus bridgesiana*).

Trees for Timber

Hardwoods

Narrow-leaf Ironbark (*Eucalyptus crebra*).
Red Stringybark (*Eucalyptus macrorhyncha*).
Slaty Gum (*Eucalyptus dawsonii*).
River Red Gum (*Eucalyptus camaldulensis*).
White Box (*Eucalyptus albens*).
A Grey Box (*Eucalyptus microcarpa*).

Softwoods

White Cypress Pine (*Callitris columellaris*). Inland form.
Canary Island Pine (*Pinus canariensis*). Only where conditions are favourable.

Trees for Fuel

White Box (*Eucalyptus albens*).
Yellow Box (*Eucalyptus melliodora*).
Acacia spp., including *Acacia pendula* and *Acacia homalophylla*.
She Oaks (*Casuarina spp.*).

THE TABLELAND DIVISION

Trees for Shade and Shelter

Camden Woollybutt (*Eucalyptus macarthurii*).
Narrow-leaf Peppermint (*Eucalyptus radiata*).
Apple (*Eucalyptus bridgesiana*).
Black Gum (*Eucalyptus aggregata*).
Yellow Box (*Eucalyptus melliodora*).
Broad leaf Peppermint (*Eucalyptus dives*).
Black Sally (*Eucalyptus stellulata*). On cold exposed damp soil.
Snow Gum or White Sally (*Eucalyptus pauciflora*). On cold exposed sites.

Narrow-leaved Black Peppermint (*Eucalyptus nicholii*).
Blackwood or Hickory (*Acacia melanoxylon*).
Cedar Wattle (*Acacia elata*).
Green Wattle (*Acacia decurrens*).
Cootamundra Wattle (*Acacia baileyana*).
Monterey Pine (*Pinus radiata*).
Long-leaved Indian Pine (*Pinus roxburghii*).
Stone Pine (*Pinus pinea*).
Deodar (*Cedrus deodara*).
*†Willow (*Salix babylonica*).
Magnolia (*Magnolia grandiflora*).
She Oak (*Casuarina littoralis*).
Chinese Elm (*Ulmus parvifolia*).
†Pin Oak (*Quercus palustris*).
†Liquidambar (*Liquidambar styraciflua*).
Pecan Nut (*Carya illinoensis*).
†English Elm (*Ulmus procera*).
†Plane Tree (*Platanus hybrida*).
†Honey Locust (*Gleditsia triacanthos*).
†Horse Chestnut (*Aesculus hippocastanum*).
European Ash (*Fraxinus excelsior*).
Claret Ash (*Fraxinus oxycarpa 'Raywoodii'*).
Box Elder (*Acer negundo*).
Poplars (*Populus* species, including *Populus deltoides* and *Populus yunnanensis*).

Trees for Windbreaks and Shelter Belts

Group I—Smaller-growing species to be used for small breaks, or in association with taller species in multiple-row breaks

Chinese Privet (*Ligustrum lucidum*).
Tree Lucerne (*Chamaecytisus prolifer*).
Osage Orange (*Maclura pomifera*).
Chinese Hawthorn (*Photinia serrulata*).
Wattles, including *Acacia baileyana* and *Acacia adunca*.
Wild Olive (*Olea africana*).
Strawberry Tree (*Arbutus unedo*).
Cypresses (various) (*Cupressus and Chamaecyparis* spp.).

Group II—Taller-growing species

Monterey Pine (*Pinus radiata*).

Yellow Pine (*Pinus ponderosa*).
Camden Woollybutt (*Eucalyptus macarthurii*).
Yellow Box (*Eucalyptus melliodora*).
Tasmanian Blue Gum (*Eucalyptus globulis*).
Smooth-barked Mountain Ash (*Eucalyptus oveades*).
Narrow-leaf Peppermint (*Eucalyptus radiata*).
Broad-leaf Peppermint (*Eucalyptus dives*).
Narrow-leaved Black Peppermint (*Eucalyptus nicholii*).
Deodar (*Cedrus deodara*).
Lawson Cypress (*Chamaecyparis lawsoniana*).
Cedar Wattle (*Acacia terminalis*).
Poplar (*Populus* spp.).
Bhutan Pine (*Pinus wallichiana*).

Hardwood Timber Trees

Red Stringybark (*Eucalyptus macrorhyncha*)—Lower elevations.
Blue-leaved Stringybark (*Eucalyptus agglomerata*).
Alpine Ash (*Eucalyptus delegatensis*).
White Mountain Ash (*Eucalyptus fraxinoides*)
Eurabbie (*Eucalyptus bicostata*)
Caley's Ironbark (*Eucalyptus caleyi*). Lower elevations of New England.
Red Box (*Eucalyptus polyanthemos*). Fencing, lower elevations.
Yellow Box (*Eucalyptus melliodora*). Fencing, lower elevations.
Snow Gum (*Eucalyptus pauciflora*). For fencing where better species will not grow.
Narrow-leaf Peppermint (*Eucalyptus radiata*). Where better species not suitable.

Softwood Timber Trees

Monterey Pine (*Pinus radiata*).
Yellow Pine (*Pinus ponderosa*).
*Mountain Gum (*Eucalyptus dalrympleana*).
*Alpine Ash (*Eucalyptus delegatensis*).

Trees for Fuel

Yellow Box (*Eucalyptus melliodora*). Lower elevations.
Stringybarks (*Eucalyptus macrorhyncha* and other species).
Snow Gum (*Eucalyptus pauciflora*).

* These species are not true softwoods, but are suitable for many softwood purposes, such as case making etc.

White Gum (*Eucalyptus rossii*).
Narrow-leaf Peppermint (*Eucalytpus radiata*).
Black Sally (*Eucalyptus stellulata*). On damp flats.
Wattle (*Acacia* spp.).

THE COASTAL DIVISION

Trees for Shade and Shelter

Brush Box (*Tristania conferta*).
Apple (*Angophora floribunda*).
Teak (*Flindersia australis*).
Black Bean (*Castanospermum australe*).
Wheel Tree (*Stenocarpus sinuatus*).
Tulipwood (*Harpullia pendula*).
Rosewood (*Dysoxylum fraseranum*).
Tallow Wood (*Eucalyptus microcorys*).
*Swamp Mahogany (*Eucalyptus robusta*).
*Bangalay (*Eucalyptus botroides*).
Blue Gum (*Eucalyptus saligna*).
White or Grey Ironbark (*Eucalyptus paniculata*).
Spotted Gum (*Eucalyptus maculata*).
Yellow Box (*Eucalyptus melliodora*).
†Yellow Blood wood (*Eucalyptus eximia*).
Cedar Wattle (*Acacia terminalis*).
Figs (*Ficus* spp.).
Kaffir Plum (*Harpephyllum caffrum*).
Water Gum (*Tristania laurina*).
Chinese Elm (*Ulmus parvifolia*).
*Swamp She Oak (*Casuarina glauca*).
Holm Oak (*Quercus ilex*).
Live Oak (*Quercus virginiana*).
‡Swamp Cypress (*Taxodium distichum*). Damp soils.
‡Box Elder (*Acer negundo*).
‡Flame Tree (*Brachychiton acerifolium*).
†Coral Tree (*Erythrina sp.*).
†Red Cedar (*Toona australis*).
†White Cedar (*Melia azedarach*).
†Jacaranda (*Jacaranda acutifolia*).

Cape Chestnut (*Calodendrum capense*).
Lilli-pilli (*Acmena smithii*).
Camphor Laurel (*Cinnamomum camphora*).
*Paper Bark (*Melaleuca quinquenervia* and *M. styphelioides*).
Turpentine (*Syncarpia glomulifera*).
Wattles (*Acacia* spp.).
Smooth-barked Apple (*Angophora costata*).
Monterey Pine (*Pinus radiata*).

Trees for Windbreaks and Shelter Belts

Group I—Smaller growing species to be used for small breaks, or in association with taller species in multiple-row breaks

Queensland Nut (*Macadamia ternifolia*).
Agonis (*Agonis flexuosa*).
Melaleuca armillaris.
White Bottle Brush (*Callistemon salignus*).
Water Gum (*Tristania laurina*).
Karo (*Pittosporum crassifolium*).
Lemon-scented Backhousia (*Backhousia citriodora*).
Carob Bean (*Ceratonia siliqua*).
New Zealand Christmas Tree (*Metrosideros excelsa*).
§Lilli-pilli (*Acmena smithii*).
§Pittosporum (*Pittosporum undulatum*).
Magnolia (*Magnolia grandiflora*).
**Turpentine (*Syncarpia glomulifera*).
Cypresses (*Cupressus* spp.).
Wattles (*Acacia* spp.).

Group II—Taller-growing species

Monterey Pine (*Pinus radiata*).
Cluster Pine (*Pinus pinaster*).
Slash Pine (*Pinus elliottii*).
Turpentine (*Syncarpia glomulifera*).
Brown Pine (*Podocarpus elatus*).
Silky Oak (*Grevillea robusta*).

---

* Species suited for brackish or poorly drained soils.
† On poor rocky sandstone soils.
‡ Deciduous.
§ Subject to wax scale.
** Can be cut back as a tall hedge.

Teak (*Flindersia australis*).

Kaffir Plum (*Harpephyllum caffrum*).

Black Bean (*Castanospermum australe*).

Tallow Wood (*Eucalyptus microcorys*).

Blackbutt (*Eucalyptus pilularis*).

Blue Gum (*Eucalyptus saligna*).

Ironbark (*Eucalyptus paniculata*).

Swamp Mahogany (*Eucalyptus robusta*).

Pink-flowering Ironbark (*Eucalyptus sideroxylon*).

Spotted Gum (*Eucalyptus maculata*).

Bangalay (*Eucalyptus botryoides*).

Paper Bark (*Melaleuca quinquenervia*) and *M. styphelioides*).

Hardwood Timber Trees

Stringybark (*Eucalyptus scabra* and *E. muelleriana*). On soils over sedimentary rocks.

White Mahogany (*Eucalyptus acmenioides* and *Eucalyptus carnea*). On fairly good moist soils in northern portion.

Ironbark (*Eucalyptus paniculata*). Various soils except poor sandy types.

Narrow-leaf Ironbark (*Eucalyptus creba*). On moderately good soils.

Blue Gum (*Eucalyptus saligna*). On fairly deep soils.

Flooded Gum, *Eucalyptus grandis*. On fairly deep soils.

Tallow Wood (*Eucalyptus microcorys*). Good deep fairly moist soil.

Blackbutt (*Eucalyptus pilularis*). Various soils.

Grey Gum (*Eucalyptus punctata*). Rather poor siliceous soils.

Bloodwood (*Eucalyptus gummifera*). For fencing on poor sandy soils.

Softwood Timber Trees

Hoop Pine (*Araucaria cunninghamii*).

Norfolk Island Pine (*Araucaria excelsa*).

Slash Pine (*Eucalyptus elliottii*).

Monterey Pine (*Pinus radiata*).

Cluster Pine (*Pinus pinaster*).

Coachwood (*Ceratopetalum apetalum*). Not a true softwood species, but useful as a light timber.

NOTES ON SPECIES RECOMMENDED

Following are brief notes on the appearance, character and uses of the recommended species. The range of each species is indicated by abbreviations, thus:

C. Coastal Division.	T. Tableland Division.
W.S. Western Slopes Division.	W.P. Western Plains Division.

Agonis flexuosa.—Small to medium-sized tree, with an attractive weeping habit, and decorative white flowers. Makes best growth over limestone. Native of West Australia. Hardy. Worth trying in W.S. and C.

Apple, Native.—Several species are known by this name. The principa ones are:

Rough-barked Apple (*Angophora*).—Medium to large sized tree with spreading crown and frequently crooked branches. Prefers alluvial soils and deep sandy loams. Good shade, shelter, and honey tree. C. and W.S.

Smooth-barked Apple (*Angophora costata*).—Medium to large-sized tree with spreading crown and picturesque twisted branches. Ornamental and shade tree on poor sandstone soils in C.

Apple Box (*Eucalyptus bridgesiana*).—Medium to large-sized tree with spreading crown and pendulous branches. Grows chiefly on flats and along watercourses, but occasionally on hillsides. Shade and shelter trees for T. and W.S.

Ash, Alpine (*Eucalyptus delegatensis*).—A tall growing tree, found on the western mountains of the Southern Tablelands. Good timber tree in T. on moderately deep moist soils.

Ash, Red (*Alphitonia excelsa*).—Medium-sized tree, native of coastal brushes, extending to North-west Slopes. Useful shade and fodder tree for that part of the State. Tolerant of a variety of soil conditions.

Ash, Claret (*Fraxinus oxycarpa "Raywoodii"*).—A deciduous tree grown mainly for its coloured foliage in autumn C.T. and parts of W.S.

Ash, Desert (*Fraxinus oxycarpa*).—A well-shaped fast growing deciduous tree up to 40 ft high, requiring reasonably deep soil C.T. and W.S.

Ash, European (*Fraxinus excelsior*).—A strong-growing deciduous tree, requiring plenty of room. T.

Ash, Smooth-barked Mountain (*Eucalyptus oreades*).—A medium to large-sized tree growing best on moderately deep moist sandy soil, Timber light in weight, but strong. T.

Athel Tree (*Tamarix aphylla*).—A small to medium-sized tree, fast growing, is easily grown from cuttings, and requires little attention after it has become established. Possibly prefers light soils. An excellent tree for shelter in the hot and dry western districts.

Backhousia, Lemon-scented (*Backhousia citriodora*).—A small tree native of Queensland. Yields a valuable oil and moderately useful for small breaks. C.

Bangalay (*Eucalyptus botryoides*).—A medium-sized tree found in moist good soils near the sea, and sometimes on fairly saline flats. A fairly good shelter tree for such sites.

Bean, Black (*Castanospermum australe*).—A fine, medium-sized ornamental and shelter tree for fairly good deep and moist soils in C. Pods reputed

poisonous to stock. Handsome cabinet timber of the heavy class. Flowers yellowish to red, pea-like.

Belah (*Casuarina cristata*).—A small to medium-sized native tree, found on heavy more or less alkaline soils, such as moist flats and depressions, chiefly in the northern part of the Western Slopes Division. Good shade and shelter tree for planting on similar sites in W.S. generally. Provides moderately useful fodder and timber.

Blackbutt (*Eucalyptus pilularis*).—A large-sized tree, growing on various soils in C., including poorer types, but preferring a moderately light loam of good depth. Fast growing, moderately useful for shelter if lopped. Good general hardwood.

Blackgum (*Eucalyptus aggregata*).—A small rather umbrageous tree with rough bark. Suitable as a shelter tree in cold damp soils in T.

Blackwood (*Acacia melanoxylon*).—A good, densely-foliaged tree of medium size, which prefers a moist, fairly rich soil in a fairly protected site. Will grow on stony basalt ridges, but becomes dwarfed. Good shade and shelter for T. Timber very ornamental.

Bloodwood (*Eucalyptus gummifera*).—Small to medium-sized tree, grown for fencing posts and poles on rather poor sandy soils in C.

Bloodwood, Yellow (*Eucalyptus eximia*).—A small tree of ornamental appearance for poor sandstone soils in C.

Boobialla (*Myoporum acuminatum*).—A small, well-shaped tree, expecially suited for planting on wet, rather saline soil near the sea. *Myoporum montanum* also known as Boobialla, a small tree useful in W.S. and W.P.

Bottle Brush, White (*Callistemon salignus*).—A small tree, of drooping habit, suitable for both brackish and dry soils. C.

Box, Bimble (*Eucalyptus populnea*).—A fairly large tree with dense shiny foliage. Moderately useful for shelter purposes in W.P. and W.S. on rather poor stiff clay soils.

Box, Brush (*Tristania conferta*).—Medium to large-sized tree with fairly heavy foliage and white feathery flowers. A rapid grower and adaptable to most soil types but prefers heavy ones. Fine shade and shelter tree and windbreak for C. and cooler, better-watered parts of W.S. Timber useful for mallets, bridge decking, wharves, etc., and resistent to white ants.

Box, Red (*Eucalyptus polyanthemos*).—Small to medium-sized tree. Prefers sedimentary formations and most common on fairly heavy but poor soils on Slopes. Suitable for fencing timber, and lower elevations T.

Box, Flooded (*Eucalyptus largiflorens*).—A small to medium-sized tree, chiefly found on low land subject to inundations in W.S. and W.P., timber hard and durable but difficult to split.

Box, Fuzzy (*Eucalyptus conica*).—A medium-sized tree with fairly heavy and somewhat ashy foliage, found chiefly on sedimentary formations in W.S. Fairly ornamental and useful for shelter. Timber strong and durable in the ground.

Box, Yellow (*Eucalyptus melliodora*).—A medium to large-sized tree of drooping habit, found on most soil except very poor sandy types, but preferring heavy alluvials. Fine shade and shelter tree for W.S. and T. Useful honey tree. Timber hard, heavy and durable, but difficult to split at times.

Box, White (*Eucalyptus albens*).—A medium to large-sized tree of spreading habit and with pale somewhat silvery leaves. Prefers fairly rich, well-drained soils. Fine ornamental and shade tree for W.S. Good bee tree. Timber durable and excellent fuel.

Box, Elder (*Acer negundo*).—A fast-growing deciduous tree preferring a moist fairly deep soil. C.T. and parts of W.S.

Brown Barrel (*Eucalyptus fastigata*).—A medium to large-sized tree found on rather good soils in moist situations in T. Timber moderately light and open-grained, and suitable for building purposes.

Bunya Pine (*Araucaria bidwillii*).—A large tree with narrow dome-shaped crown, C.T. and W.S.

Camphor Laurel (*Cinnamomum camphora*).—Handsome dense-topped tree which grows well in C. and better watered parts of W.S. Prefers summer rainfall and rather moist subsoil. Good tree for shade, shelter and windbreaks, but robs adjoining ground, affecting growth of other plants to some extent.

Cape Chestnut (*Calodendrum capense*).—Medium-sized handsome tree producing dense masses of white and flesh-coloured flowers in the spring. Requires moderately good soil and not too much exposure. C.

Carob Bean (*Ceratonia siliqua*).—Small to medium-sized tree which will grow on a variety of soils, but prefers a moderately rich deep soil with a fair proportion of lime. A warm dry climate species. Produces valuable pods useful for forage. Rather slow-growing at first. W.S. (better parts) and C.

Cedar, Red (*Toona australis*).—Large deciduous tree with an open spreading crown. Requires good deep moist soil for its best development. Fine ornamental and shade and shelter tree where a deciduous tree is required. Timber much valued for cabinet and general indoor work.

Cedar, White (*Melia azedarach*).—A large deciduous tree generally useful for shade and ornamental purposes in C., W.S. and W.P., being very hardy and drought-resistant. Timber light and useful for softwood purposes. Fruits poisonous to pigs.

Chinese Hawthorn (*Photinia serrulata*).—A small broad-headed tree up to 25 ft high, useful for hedges and breakwinds. T. and cooler parts of C. and W.S.

Christmas Tree, New Zealand (*Metrosideros excelsa*).—Handsome small tree with spreading branches, dark green foliage and brillant scarlet flowers. Hardy species, especially suited for planting in exposed situations near the sea.

Coachwood (*Ceratopetalum apetalum*).—A medium-sized tree found in gullies in C. Pale pink timber, useful for any purposes requiring a strong fairly light timber. A good garden tree for rather sheltered moist sites in C.

Colane.—*See* Gruie.

Cooba (*Acacia salicina*).—A small tree of drooping habit, generally associated with river country in W.P. and W.S. Useful ornamental and shelter tree.

Coolabah (*Eucalyptus microtheca*).—A small to medium-sized tree of rather crooked growth and with dense, drooping, somewhat ashy-coloured foliage. Grows on heavy black soils often near water. Useful for shade and shelter in W.P. Suckers a good deal. Useful fuel.

Coral Tree (*Erythrina* sp.).—A useful deciduous species suitable for positions requiring summer shade and free access of light and sun during winter. Scarlet flowers are ornamental. Will grow on a variety of sites, including sandy soils close to the sea. C.

Cypress, Swamp (*Taxodium distichum*).—A large deciduous tree with feathery foliage well-suited for damp situations, C.T., and parts of W.S.

Cypresses (*Cupressus* spp.).—Useful trees for wind-breaks, shelter belts, shade and ornamental trees. The principal species are as follows:

Arizonian Cypress (*Cupressus glabra*).—A useful and ornamental species, and fairly hardy. C.T. and W.S.

Italian Cypress (*Cupressus sempervirens*).—An upright, long-lived species, fairly frost and drought-hardy. C.T. and parts of W.S.

Cypress, Lawson's (*Chamaecyparis lawsoniana*).—A shapely tree, usually furnished to the ground with broad, flat, drooping, fern-like sprays of foliage. Requires good rainfall and moist soil. T. and hilly parts of C.

Lusitanica Cypress (*Cupressus lusitanica*).—Useful shade and shelter trees in C. and T. Sometimes susceptible to frost injury.

Monterey Cypress (*Cupressus macrocarpa*).—Fast-growing species of spreading habit, but apt to die out here and there, and is hardly a safe species to plant. Good shelter tree on deep, fairly moist soil.

Nepal Cypress (*Cupressus torulosa*).—Useful shade and shelter tree preferring fairly moist and good soil in cool localities in C. and T.

Cypress Pine, White (*Callitris columellaris*, inland form).—A widely distributed tree, especially on good sandy loams on W.S. Useful shelter tree. Timber valuable, being durable and white ant resistant. Good tree for maintaining in belts, giving shelter and timber. W.S. and W.P.

Deodar (*Cedrus deodara*).—A medium-sized tree of pine-like appearance which will thrive on a variety of soils, but does best in the cooler parts of the State. A fine ornamental tree and useful for shelter work and windbreak formations.

Elms (*Ulmus* spp.).—Cold climate deciduous trees requiring deep, fertile, fairly-moist but well-drained soils for their best development. The two common species are the **English Elm** (*Ulmus procera*) and the **American Elm** (*Ulmus americana*). The **Chinese Elm** (*Ulmus parvifolia*) is a graceful tree up to 50 ft high. It is usually evergreen, but in very cold climates is deciduous for a short period. C.T. and W.S.

Eurabbie (*Eucalyptus St. johnii*).—Medium to large-sized tree. Does best on cool, moist sites on moderately good loams. Not so good a tree as the **Tasmanian Blue Gum** (*Eucalyptus globulus*) for similar class of work. Timber useful for general hardwood purposes. T. and parts of C.

Figs (*Ficus* spp.).—Good shade trees, and will grow well on most classes of soils, including the poorer ones. Fairly hardy, and will stand lopping. Roots travel far afield and may be harmful to gardens or crops in the vicinity. The chief species are:

Moreton Bay Fig (*Ficus macrophylla*).—A large tree adapted for a wide range of soils. Rather dirty as regards fruits and leaves. C. and W.S.

Port Jackson Fig (*Ficus rubiginosa*).—A hardy species for coastal planting.

White Fig (*Ficus virens*).—A partly deciduous, very ornamental species. C.

Deciduous Fig (*Ficus superba var. henneana*).—A fine ornamental tree which drops its leaves for a very short period only.

Ficus microcarpa var. *hillii*.—One of the small-leaved figs. Forms a very attractive, compact tree, and is recommended for ornamental, shade and shelter work in C.

Flame Tree (*Brachychiton acerifolium*.—Medium to large-sized deciduous tree, producing a mass of brillant scarlet flowers just before the leaves appear. Prefers a fairly good moist soil in sheltered areas for its best development. C.

Gruie (*Owenia acidula*).—A small tree with milky juice, and leaves resembling those of a pepper tree. A very useful tree for shade, shelter and ornamental work, but seeds difficult to germinate. W.S. and W.P.

Gum, Blue (*Eucalyptus saligna*).—A tall-growing shaftlike species found chiefly on good deep, fairly moist soils in C. Reddish timber, straight grained, and a fine general hardwood. The tree can be grown as a shelter belt and kept cut back fairly hard. C.

Gum, Brittle (*Eucalyptus rossii*).—A small to medium-sized tree with spreading branches and short stem, found on rather poor, sandy soils. Pale red timber is durable in the gound and makes fairly good fuel. T. and W.S.

Gum, Flooded (*Eucalyptus gradis*).—A tall tree, suitable for moist soils and useful for shelter and timber. C.

Gum, Grey (*Eucalyptus punctata*).—Small to medium-sized tree found on poor soils. Reddish timber, strong and durable, and good for fencing posts. A useful timber tree for poorer soils. C.

Gum, Mountain (*Eucalyptus goniocalyx*).—A medium to large-sized tree which does best on fairly good and deep soils, but will grow on poorer types. Timber strong and fairly durable, pale yellowish to greyish brown. C. and T.

Gum, River Red (*Eucalyptus camaldulensis*).—Medium to large-sized tree, found mainly along western rivers or on alluvial flats subject to inundation. Useful shade and shelter trees. Timber of moderate usefulness as a general hardwood, and sometimes used for fruit cases. W.S. and W.P.

Gum, Snow (*Eucalyptus pauciflora*).—Small to medium-sized tree, useful for shade and shelter or higher parts of T. Grows on a variety of soils, but shows, if anything, a preference for basalt. Timber not good quality, but makes good fuel and fencing posts, expecially on wet ground. T.

Gum, Spotted (*Eucalyptus maculata*).—Medium to large-sized tree, usually found on moderately poor soil. Timber useful for general hardwood purposes, tool handles, etc. C.

Gum, Sugar (*Eucalyptus cladocalyx*).—A useful species for planting in W.S. and W.P., and especially in the south for general shelter purposes. Prefers fairly light soils. Quick growing, somewhat susceptible to frost injury. Timber moderately useful.

Gum, Tasmanian Blue (*Eucalyptus globulus*).—A fast-growing ornamental species, useful for shade and shelter. Timber of moderate usefulness. C.T., and parts of W.S.

Honey Locust (*Gleditsia triacanthos*).—A deciduous tree of somewhat spreading habit, armed with spines. Pod contains pulpy material which is fairly useful fodder for cattle and pigs. A useful tree for hedge work. Can be cut back hard, making an impenetrable hedge or small break. C., T. and parts of W.S.

Horse Chestnut (*Aesculus hippocastanum*).—A beautiful ornamental or shade tree with showy flowers and handsome foliage. Deciduous. Good deep soils in T.

Ironbark, Caley's (*Eucalyptus caleyi*).—A medium-sized tree with drooping, rather silvery foliage. Its deep-red timber is durable and useful for hardwood purposes. A good fuel. T. and W.S.

Ironbark, Narrowleaf (*Eucalyptus crebra*).—A medium to large-sized tree of spreading habit. Timber very hard, strong and durable, and suitable for fence posts, sleepers, bridgework, etc. A useful shade tree. Prefers deep fairly good soils or sandy soils with a clay subsoil. W.S. and C.

Ironbark, Pink Flowering (*Eucalyptus sideroxylon*).—A medium-sized tree of ornamental appearance. Bark almost black and much furrowed. A hardy species, which does well on fairly poor clayey soil or rocky ridges in C., W.S., and better parts of W.P. Timber strong, durable, and moderately useful.

Ironbark, White or Grey (*Eucalyptus paniculata*).—A medium to large-sidze tree, possessing a very fine timber of great strength and durability. It forms a nice ornamental tree, and when grown in clumps and lopped makes very useful shelter. Will grow in most soils except poor sandstones. C.

Jacaranda (*Jacaranda mumosifolia*).—As a specimen or avenue tree this deciduous species is difficult to surpass in beauty of flower and foliage. Requires fairly good soil and not too much exposure. Rather susceptible to frost in early stages, requiring some protection. C. and W.S.

Kaffir Plum (*Harpephyllum caffrum*).—Evergreen tree, with leaves more or less clustered at ends of branches and with a dark-red fruit something like a large olive. Suitable for ornamental and avenue work and for shelter purposes on moderately good soils.

Karo (*Pittosporum crassifolium*).—A compact little tree up to 35 ft high, suitable for coastal planting, standing up to wind and sea-side conditions.

Lilli-pilli (*Acmena smithii*).—Small to medium-sized tree, producing succulent fruits, which are white with a purplish tint. Makes a fine ornamental and shade tree on moderately good soils in C., but subject to wax scale and sooty mould in some districts.

Lilli-pilli, Weeping (*Syzygium floribundum*).—A small to medium-sized tree of ornamental appearance. Requires fairly good soils in C.

Liquidambar (*Liquidambar styraciflua*).—A beautiful ornamental deciduous tree, the maple-like leaves being finely coloured in the autumn. Hardy and fairly fast growing, but requires a deep soil for its best development. T. and C.

Magnolia (*Magnolia grandiflora*).—A fine small ornamental tree, fairly useful for shade purposes. Will not stand too much exposure. Has large glossy green leaves and handsome flowers. C. and T.

Mahogany, Swamp (*Eucalyptus robusta*).—A medium-sized tree with large glossy leaves. A useful ornamental and shelter tree on damp or badly drained soils near the sea. Reddish timber, fairly durable in the ground. Does quite well on fairly dry sites, but not very frost-resistant. C.

Mahogany, White (*Eucalyptus acmenioides*).—A medium to large tree producing a useful, strong, durable timber, somewhat resembling Tallow Wood, but harder to work. On fairly moist and moderately good soils in C.

Melaleuca armillaris—A shrub or small tree, very hardy in sandy soil near the coast line, but suitable elsewhere. C.

Motherumbah (*Acacia cheelii*).—A small tree, useful for shade and shelter purposes. Eaten by stock, and often regarded as useful fodder. Related species, however, are poisonous. Northern portion of Western Slopes Division.

Mugga (*See* Ironbark, Pink-flowering).

Myall (*Acacia pendula*).—A small tree with pendulous branches, of ornamental appearance. Good shade and shelter. Timber much sought after for fuel, burning well and with a very agreeable odour. Useful drought fodder. Rich alluvial soils or black soils. W.S. and W.P.

Norfolk Island Hibiscus (*Lagunaria patersonia*).—An ornamental tree of medium size, producing pink flowers. A useful shelter tree. Stands exposure to wind on coast line fairly well. Fine hairs producing inside the fruit are sometimes a source of irritation. C. and W.S.

Nut, Queensland (*Macadamia tetraphylla*).—A small compact tree, which produces an edible nut of excellent flavour and in good commercial demand. Also useful for shelter and ornamental purposes. Prefers a fairly good deep soil and not too much exposure. C.

Oaks (*Quercus* spp.)—Most species require a deep, fairly rich and heavy soil and a good rainfall, and, although slow growing, are usually very hardy when once established. **Evergreen Oak** or **Live Oak** (*Quercus virginiana*) is a useful shelter tree in T., W.S. and C. **Pin Oak** (*Quercus palustris*) is a useful ornamental summer shade tree for T. and parts of C. It is deciduous, very frost hardy, and fairly fast growing. **English Oak** (*Quercus robur*) makes fair development on good moist soils in C. and T.

Holm Oak (*Quercus ilex*).—A hardy evergreen oak with a broad, rounded head, slow growing, but useful for shade and shelter. C., T. and W.S.

Oaks, She (*Casuarina* spp.).—The various She Oaks are useful for shade, shelter, ornamental and fodder purposes. The **River Oak** (*Casuarina cunninghamiana*) is a handsome tree for the banks of fresh water streams. It is a natural bank protector, the large spreading roots holding the soil together. The timber is used for shingles and is an excellent fuel; the foliage is a moderately useful drought fodder. The **Drooping She Oak** or **Mountain Oak** (*Casuarina stricta*) makes growth on dry soils or ridges in C., T. and W.S. The **Black She Oak** (*Casuarina littoralis*) is a useful tree on poor sandstone soils in T. and C. The **Swamp Oak** (*Casuarina glauca*) is useful for planting in saline, poorly drained soils or on exposed situations near the sea.

Olive (*Olea europaea*).—A hardy small tree which is very useful for shelter purposes, hedges, and small breaks in W.S. and parts of W.P. Care is necessary in transplanting so that the roots will not be disturbed too much.

Orange, Osage (*Maclura pomifera*).—A deciduous tree with spreading habit, usually grown as a hedge plant or as an ornamental tree for the foliage and conspicuous orange-like fruit. Branches armed with spines. Fruit not edible. Makes dense impenetrable hedge. W.S., T. and C.

Orange, Wild (*Capparis mitchellii*).—A small native tree of rather dense growth. Useful shade and shelter tree for W.P. and W.S. Begins life as a tangled thorny shrub, sometimes scrambling up trees by means of its prickles, but soon developing one or more leaders.

Pecan Nut (*Carya illinoensis*).—Large handsome tree, yielding valuable nuts. It grows well in parts of T. and adjoining slopes, reaching its best development on rich alluvial soils. Useful shade and shelter. Difficult to transplant successfully except from containers.

Pepper Tree (*Schinus molle*).—An adaptable tree, very hardy and not particular as to soil requirements. A useful tree for shade and shelter in W.S. and W.P.

Peppermint (*Eucalyptus radiata*).—Medium to large-sized tree, useful for shade and shelter on a fairly wide range of soils, including the poorer ones in T. Timber fairly durable for fencing posts.

Peppermint, Broad Leaf (*Eucalyptus dives*).—A medium-sized tree, requiring moderately moist conditions for its best development. Leaves distilled for their oil. Timber not of much value. T.

Peppermint, Narrow-leaved Black (*Eucalyptus nichollii*).—A small to medium-sized tree, useful for shade and shelter on a variety of soils. C. and T.

Pine, Brown or Plum (*Podocarpus elatus*).—A medium to large-sized tree with a small fleshy purplish fruit. Slow growing, but makes a good ornamental and shelter tree. Requires fairly good soil and not too much exposure. C. Timber a valuable softwood, and makes durable piles in salt water.

Pine, Cypress (*Callitris glauca*).—(*See* Cypress Pine.).

Pine, Hoop (*Araucaria cunninghamii*).—A tall, symmetrical tree, of attractive appearance and medium rate of growth. Will grow on a wide range of soils, including rather poor sandy types provided rainfall is good, but prefers fairly rich loams. Timber a valuable softwood. C.

Pine, Norfolk Island (*Araucaria excelsa*).—One of the best species for ornamental purposes and landscape work in sandy soil near the sea. A very symmetrical, tall-growing species, fairly rapid in growth and little affected by wind once the young plants have become established. A suitable tree for growing as Christmas trees for decorative work in tubs. Timber probably valuable.

Pines (*Pinus* spp.).—Useful trees for shelter, ornament, and timber. The chief species are:

Aleppo Pine (*Pinus halepensis*).—A tree with short branches forming a rather open round-topped head. Moderately hardy, enduring confined to shallow soils better than some other pines, but does best and should besoils containing a fair quantity of lime. Prefers dry summer and winter rainfall. W.S.

Canary Island Pine (*Pinus canariensis*).—Fairly drought-resistant and not exacting as to soil requirements. Fairly slow growing, but long lived. Timber of high quality, Young seedlings develop a strong tap-root and must be transplanted carefully. C., T. and W.S.

Cluster Pine (*Pinus pinaster*).—Does well on poor sandy soil. Cultivated extensively on areas adjoining Bay of Biscay for its resinous products. C. and W.S.

Monterey or Insignis Pine (*Pinus radiata*).—The most commonly grown pine in this State. A rapid grower and comparatively free from disease. Requires a porous, well-drained, and fairly fertile soil, but will stand shallow soils provided the rainfall is good. A very useful tree for shelter and windbreak formations in T., C., and parts of W.S. Timber is useful second-class softwood.

Long Leaf Indian Pine (*Pinus roxburghii*).—Rather similar to Canary Island Pine. An ornamental and useful species for C. and T., preferring a fairly moist soil.

Slash Pine (*Pinus elliottii*).—A medium-sized tree suitable for summer rainfall areas of the Coastal Division. Useful for windbreaks and soft-wood timber.

Stone Pine (*Pinus pinea*).—A tree with long spreading branches, forming a rather broad, flat-topped picturesque tree. Seeds edible. Fairly hardy species, and will grow on a variety of soils. W.S., T., and C.

Yellow Pine (*Pinus ponderosa*).—A tree with spreading, frequently pendulous branches forming a rather narrow head. Does well in cool, well-watered parts of T., especially in the south.

Pittosporum, Western (*Pittosporum phylliraeoides*).—A shrub or small slender tree useful for small windbreaks or hedges, W.P. and W.S.

Plane Tree, Common (*Platanus hybrida.*)—An ornamental deciduous hybrid with handsome foliage. A hardy, quick-growing tree, little troubled by disease. Stands pruning well. Prefers deep, fairly free and fertile soil. Good summer shade tree. C., T., and W.S.

Poplars (*Populus* spp.).—Various species grown fairly extensively, especially in the colder parts of the State as avenue trees and for breakwinds and landscape work. Fairly fast growing deciduous or sub-evergreen trees, moisture loving, but will not tolerate waterlogged or badly drained sites. Prefers rich, well-drained loamy soils with a good supply of subsoil moisture. Some species sucker badly. The chief species are the **Lombardy Poplar,** a tree of upright columnar habit, largely grown for avenues and shelter belts or for formal effects in landscape work; **White Poplar**, a tall-growing species, which suckers profusely and should not be palnted; **Cottonwood** (*Populus deltoides*), a vigorous, fast-growing species, with rather spreading graceful branches and a fairly open head; and **Wislizen's Poplar** (*Populus wislizenii*), a short-boled, fairly wide-crowned species, which should be useful for shade purposes, particularly on river banks although moderately drought-hardy.

Rosewood (*Dysoxylum fraseranum*).—A medium-sized tree of use for ornamental and shade purposes. Prefers good, rather moist soils, but does quite well on poorer sites. Wood has a pleasant rose-like odour and can be used for cabinet and decorative work. C.

Sally, Black (*Eucalyptus stellulata*).—A small to medium-sized tree with a fairly dense spreading crown. It shows a preference for basaltic soils, and is usually found on damp flats or near watercourses in high, rather open country. Useful small shelter tree on cold wet soils in T. Timber makes good fuel.

She Oaks, (*See* Oaks, She).

Silky Oak (*Grevillea robusta*).—A medium to large-sized tree with fern-like foliage. A rapid grower and useful for shade, shelter and ornamental purposes, making good growth under a wide range of conditions. Fairly drought-hardy. A useful tree for W.S., parts of W.P. and C. Timber used a good deal for cabinet work, indoor fittings, etc.

Strawberry Tree (*Arbutus unedo*).—A compact evergreen small tree or tall shrub with white flowers and red fruits, useful for small breaks, tall hedges, and ornamental purposes. T.

Stringybark.—Most of the Stringybarks supply good timber, which is fissile, moderately heavy, strong and durable. **Red Stringybark** (*Eucalyptus macrorhyncha*) is a medium-sized tree with a good straight bole. The timber is useful for general purposes and is freely used for fencing. W.S. **Blue-topped Stringybark** (*Eucalyptus agglomerata*) has a timber with a great reputation for durability. Prefers sedimentary soils. C. and T.

Tallowwood (*Eucalyptus microcorys*).—A medium to large-sized tree which prefers a deep, moist, rather heavy and rich soil. The timber is a valuable hardwood. The tree is distinctly attractive for ornamental and shelter purposes and stands cutting back, but is not frost hardy. C.

Paper Bark, Broadleafed (*Melaleuca quinquenervia*).—A small to medium-sized tree, useful for shade, shelter, and beautification on brackish soils and damp flats in C. Light-brown timber regarded as very durable in the ground. The **Prickly-leaved Tea Tree** (*Melaleuca styphelioides*) has similar uses and requires the same situation. Both species are very useful for brackish soils.

Crows Ash or Native Teak (*Flindersia australis*).—A medium to large-sized tree with small white flowers with brown centres. Timber heavy, strong, and useful for general building purposes. A handsome ornamental species and useful for shelter. Requires moderately good soil and rainfall. C.

Tree Lucerne, False (*Chamaecytisus prolifer*).—A shrub or small tree up to 18 feet in height. Deep rooting and fairly drought-resistant. Good hedge plant and suitable for small windbreaks. More or less useful fodder plant. Flowers useful for bees. W.S., T. and C.

Tulip Wood (*Harpullia pendula*).—Small to medium-sized tree of value for shade and ornament on moderately good soils in C. Timber attractively figured, hard and heavy.

Turpentine (*Syncarpia glomulifera*).—Medium to large-sized tree, very useful for shade, shelter, and windbreak formations. It forms a dense growth which makes a fine break, and is usually free from insect and fungal diseases. Coppices freely and stands cutting back well, and will form a trim, dense hedge or small break, which is very long-lived. Timber used extensively for piles in salt water. Will grow on a variety of soils, but prefers moderately good and moist soils.

Walnut (*Juglans regia*).—May be planted for shelter, shade and ornament, and yields a commercially valuable fruit. Slow growing. Requires a fairly rich soil. Better parts of W.S. and T.

Water Gum (*Tristanai laurina*).—A small to medium-sized tree, fairly dense habit of growth. Suitable for damp soils but grows well on drier sites. C.D.

Wattles (*Acacia* spp.).—The wattles are fast-growing species, suitable for providing quick shelter, but are not long lived. They may be used as nurses for more permanent trees. Timber useful for fuel. Bark of some species excellent for tanning purposes. Fine ornamental trees, providing blossoms during the winter months. **Cedar Wattle** (*Acacia elata*) forms a medium-sized tree and has leaves like the Pepper Tree. The foliage is most ornamental. It is quick growing and useful for shade, shelter and breakwinds in T. and C. **Cootamundra Wattle** (*Acacia baileyana*) can be grown in W.S., T. and C. **Queensland Wattle** (*Acacia podalyriifolia*) is an ornamental species suitable for W.S., T. and C. **Acacia Adunca** is one of the best wattles, being longer lived than most. It is a most ornamental species, and suitable for shelter work. It prefers a fairly heavy soil. C. and T.

Wheel Tree (*Stenocarpus sinuatus*).—A medium-sized tree with large bright-red flowers arranged in wheel-like clusters. Most ornamental and a useful shade and shelter tree. Prefers well-drained, deep soil in fairly sheltered situations. C.

Wilga (*Geijera parviflora*).—A small, well-shaped tree, hardy and drought resistant. It makes an excellent shade tree, and is one of the best species for planting in W.S. and W.P. It is usually found on red soils and heavy alluvials.

Willows (*Salix* spp.).—Deciduous species doing best where the soil moisture is high. Will grow quite well in saturated soil provided the water is not stagnant Very hardy, to cold conditions, but requires fairly good soil. The **Weeping Willow** (*Salix babylonica*) stands practically in a class by itself for riverside planting. It stops bank erosion and is useful for shade and shelter, is a useful stock food for bad periods, and is readily propagated from cuttings. C., T., W.S., and parts of W.P.

Woollybutt (*Eucalyptus longifolia*).—A medium to large-sized, straight-growing species which prefers moist alluvial soils. Timber very durable in the ground and useful for fencing. The species may be grown for shelter work. C.

Woollybutt, Camden (*Eucalyptus macarthurii*).—An umbrageous tree with dark green foliage. It makes a fine shade and shelter tree, and is specially suited for heavy, moist soils in T. Leaves yield an oil of value for perfumery purposes. Timber inferior.

87649 5.72 V. C. N. BLIGHT, GOVERNMENT PRINTER